SIEMENS

7815

SQM5 gear side with AGA58.x drive shaft no. 7

SQM5 rear side, version without second end of AGA58.x drive shaft

SQM5 rear side, version with 2 ends of AGA58.x drive shaft

Actuators for Air and Gas Dampers SQM5...

with electronic modules

- **SQM5 electromotoric actuator up to 40 Nm torque**
- **Clockwise and counterclockwise variants**
- **Running times from 10 to 90 seconds**
- **Different shaft designs available**
- **With one or two ends of the AGA58.x drive shaft; AGA58.x drive shafts can be replaced or are available separately**
- **Can be equipped with electronic modules for control and position feedback signal via steady signals**
- **Internal and external position indication**
- **AGA58.x drive shaft and camshaft can be disengaged separately**
- **Variants with UL certification**

The SQM5 and this Data Sheet are intended for use by OEMs which integrate the SQM5 in their products!

Disclaimer

Please note that this translation may not fully reflect all linguistic nuances, technical terminology, or cultural context of the original text. Although it has been prepared with due care, variations in content or interpretation cannot be entirely excluded. This translation is provided for general informational purposes only and shall **not** be regarded as legally binding or as the final version. For any official or legally binding matters, reference should always be made to the **original version** in German.

Use

The SQM5s are designed to drive air dampers and gas dampers. Areas of application are oil and gas burners of medium to larger capacity. They are primarily intended for load-dependent control of the gas flow rate, oil volume, and combustion air volume in connection with 3-position step controllers or modulating controllers (e.g., 4…20 mA), and/or directly by the burner control.

Supplementary documentation

Product type	Type of documentation	Designation	Documentation number
ASZ	Data sheet	Potentiometer	N7921
AGA56	Data sheet	Electronic module	N7922

Warning notes

To avoid injury to persons, damage to property or the environment, the following warning notes must be observed!

Only qualified staff may open, interfere with or modify the actuators!

- Read the documentation on the SQM5s carefully and fully. Failing to do so can lead to dangerous situations
- The user must ensure that the SQM5s meet the requirements of the relevant application standards
- All product-related activities (mounting, settings and maintenance) must be performed by qualified and authorized personnel

Caution!

- **Risk of electric shock – to disconnect the SQM5 from power, it may be necessary to open more than one switch. Before performing maintenance work, the SQM5 must be disconnected from the power supply**
- **The electrical connection between the conduit fittings is not made automatically. It must be established on the installation site**
- **The connecting plate is made of plastic and does not provide earthing of the conduit fittings. Earthing must be ensured by adequate washers and wire links**
- **All cam switch settings must satisfy the requirements of the relevant application standards**

- To ensure protection against electric shock, the connection terminals must have adequate protection. Make certain that non-insulated connections or wires cannot be touched
- Each time work has been carried out (mounting, installation, service work, etc.), check to ensure that wiring is in an orderly state
- The SQM5s must not be put into operation following impact or shock; even if they do not exhibit any visible damage, their safety functions may be impaired
- Static charges must be avoided since they can damage the electronic components of the SQM5 on contact.
  Recommendation: Use ESD equipment

Notes on use in North America

- Only flexible conduits with relevant accessories may be used
- Only copper conductors may be used
- All Class 2 circuits must be wired with CL3, CL3R, CL3P or equivalent cables
  OR
  All circuits are wired according to Class 1 (electric light or power circuits)

Mounting notes

- Ensure that the relevant national safety regulations are complied with
- In the geographical areas where DIN regulations are in use, the requirements of VDE must be complied with, especially DIN/VDE 0100, 0550 and DIN/VDE 0722
- The SQM5 must be protected from direct sunlight
- Tightening torques
  - Cover screws: 3.5 Nm
  - Connecting cover: 2 Nm

Installation notes

- Ensure that the electrical wiring is in compliance with national and local regulations
- Make certain that strain relief of the connected cables is in compliance with the relevant standards
  (e.g. in accordance with DIN EN 60730 and DIN EN 60335)
- Ensure that spliced wires cannot come into contact with neighboring terminals. Use suitable ferrules
- Unused connections on the SQM5 must be fitted with a dummy plug
- When wiring the unit, separation between the 120 V AC or 230 V AC range and the other voltage ranges must be maintained in order to ensure protection against electric shock
- The connection between the AGA58.x drive shaft of the SQM5 and the respective controlling element must be form-fitted
- Only plastic versions of cable glands may be used

Standards and certificates

Applied directives:

- Low-voltage directive 2014/35/EC
- Electromagnetic compatibility EMC (immunity) 2014/30/EC

Compliance with the regulations of the applied directives is verified by the adherence to the following standards / regulations:

- Automatic electrical controls for household and similar use Part 1: General requirements DIN EN 60730-1
- Automatic electrical controls for household and similar use Part 2-14: Particular requirements for electric actuators DIN EN 60730-2-14

The relevant valid edition of the standards can be found in the declaration of conformity!

Note
Environmental Product Declaration (EPD).
The Environmental Product Declaration for the SQM5 includes a full life cycle assessment (LCA) and can be accessed via the following link:
http://www.siemens.com/bt/download

EAC Conformity mark (Eurasian Conformity mark)

UKCA conformity mark (UK compliance)

China RoHS
Hazardous substances table:
http://www.siemens.com/download?A6V10883536

For use in the US/Canada, the SQM5s are identified with an '**R**' (see example) and are both UL-approved and CSA-approved.

Example: SQM50.480**R**1

Lifetime

The SQM5 has a designed lifetime* of 250,000 burner startup cycles (OFF ⇨ ON ⇨ OFF) under load with the rated torque in the entire rotation angle range, which under normal operating conditions in heating mode corresponds to approx. 10 years of service (starting from the production date given on the type label). This is based on the endurance tests specified in the standard EN 298. A summary of the conditions has been published by the European Control Manufacturers Association (Afecor) (www.afecor.org).

The designed lifetime is based on use of the SQM5 according to the manufacturer's data sheet. After reaching the designed lifetime in terms of the number of burner cycles, or after the corresponding usage time, the SQM5 must be replaced by authorized personnel.

*The designed lifetime is not the warranty time specified in the Terms of Delivery

Disposal notes

The SQM5 contains electrical and electronic components and must not be disposed of together with domestic waste. Local and currently valid legislation must be observed.

Mechanical design

Housing	• Housing sections made of die-cast aluminum • Covers made of impact-proof and heat-resistant plastic
Drive motor	• Synchronous motor
Couplings	• AGA58.x drive shaft and camshaft can be adjusted independently of the gear train by means of 2 separate couplings • AGA58.x drive shaft and camshaft can be disconnected from the gear train and motor by manually actuating a coupling (coupling pin (Kx), refer to chapter 'Technical data') • Automatic reengagement • Coupling pin (K1 and K2)

- Separation of gear and camshaft using coupling pin (K1)

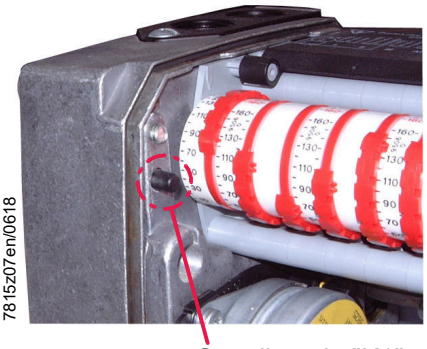

Coupling pin "K1"

- Disconnection of AGA58.x drive shaft and gear train by means of coupling pin (K2)

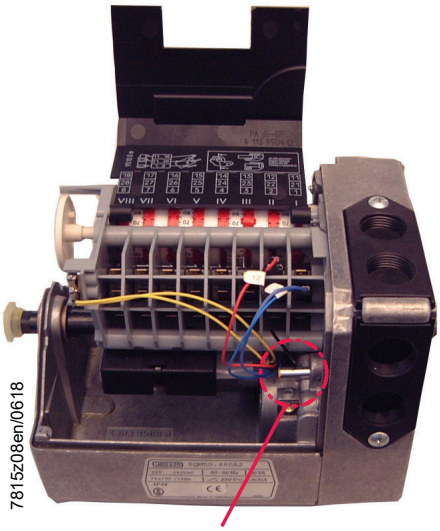

Coupling pin "K2"

Cam shaft drive	• Backlash-free gearing
Adjustment of switching points	• Via rotating cams • Scales adjacent to the cams indicate the angle of the switching point
Position indication	• Internally: – Scale at the end of the drive shaft – Black scale for counterclockwise rotation, single arrow on the cam – Red scale for clockwise rotation, double arrow on the cam • Externally: – Scale in viewing window

Mechanical design (cont´d)

Electrical connections	• Blade terminal on micro switch • Screw terminals for «N» and «PE» • Subassembly and fixing of wiring by means of removable Pg plastic insert possible • Easy introduction of cables through large openings in the housing • Fixing of Pg insert with all cables by means of a screw
Gear train	• Maintenance-free gearwheels and bearings
AGA58.x drive shaft	• Secured with a removable circlip • Easily exchangeable • Drive on both sides possible with corresponding AGA58.x drive shaft • Different versions of the AGA58.x drive shaft available
Fastening the SQM5	• Fixing holes on the front of the housing and at the bottom • Front fixing also possible from inside the housing • Installation height variable by means of separately available AGA57.x adapters

Type summary (other types are available on request)

SQM5 with premounted accessories only on request.

AC 220 V -15% ... AC 240 V +10%, 50…60 Hz ±6%

Standard types! (other versions on request)		Torque and holding torque 3)	Running time at 50 Hz for angular rotation 1)		Auxiliary switches incl. 2 end switches	Drive shaft version	Electronic module (integrated ex works) 5)	Potentiometer (integrated ex works) 6)
Article no.	Type	Max. Nm 2)	90°	130°	Piece	**AGA58.x**	**AGA56.x**	**ASZ…**
BPZ:SQM50.260A2G4	**SQM50.260A2G4**	10	10 s	14 s	4	--- [4])	**56.41A27**	**12.33**
S55452-D401-A100	**SQM50.260A2Z3**	10	10 s	14 s	4	--- [4])	**56.9Ax7**	**12.30**
BPZ:SQM50.341A2	**SQM50.341A2**	10	15 s	22 s	4	**58.1**	---	---
BPZ:SQM50.341A2G3	**SQM50.341A2G3**	10	15 s	---	4	**58.1**	**56.41A27**	**12.30**
BPZ:SQM50.380A2	**SQM50.380A2**	15	15 s	22 s	8	--- [4])	---	---
BPZ:SQM50.381A2	**SQM50.381A2**	10	15 s	22 s	8	**58.1**	---	---
BPZ:SQM50.381A2G3	**SQM50.381A2G3**	10	15 s	---	8	**58.1**	**56.41A27**	**12.30**
BPZ:SQM50.387A2	**SQM50.387A2**	15	15 s	22 s	8	**58.7**	---	---
BPZ:SQM50.387A2G3	**SQM50.387A2G3**	15	15 s	---	8	**58.7**	**56.41A27**	**12.30**
BPZ:SQM50.424A2Z7	**SQM50.424A2Z7**	15	34 s	---	2	**58.4**	**56.9A27**	**12.30**
BPZ:SQM50.441A2	**SQM50.441A2**	10	34 s	49 s	4	**58.1**	---	---
BPZ:SQM50.441A2G3	**SQM50.441A2G3**	10	34 s	---	4	**58.1**	**56.41A27**	**12.30**
BPZ:SQM50.441A2Z3	**SQM50.441A2Z3**	10	34 s	---	4	**58.1**	**56.9A27**	**12.30**
BPZ:SQM50.480A2	**SQM50.480A2**	15	34 s	49 s	8	--- [4])	---	---
BPZ:SQM50.480A2G3	**SQM50.480A2G3**	15	34 s	---	8	--- [4])	**56.41A27**	**12.30**
BPZ:SQM50.480A2Z3	**SQM50.480A2Z3**	15	34 s	---	8	--- [4])	**56.9A27**	**12.30**
BPZ:SQM50.481A2	**SQM50.481A2**	10	34 s	49 s	8	**58.1**	---	---
BPZ:SQM50.481A2G3	**SQM50.481A2G3**	10	34 s	---	8	**58.1**	**56.41A27**	**12.30**
BPZ:SQM50.481A2Z3	**SQM50.481A2Z3**	10	34 s	---	8	**58.1**	**56.9A27**	**12.30**
BPZ:SQM50.482A2	**SQM50.482A2**	15	34 s	49 s	8	**58.2**	---	---
BPZ:SQM50.482A2Z3	**SQM50.482A2Z3**	15	34 s	---	8	**58.2**	**56.9A27**	**12.30**
BPZ:SQM50.483A2	**SQM50.483A2**	15	34 s	49 s	8	**58.3**	---	---
BPZ:SQM50.681A2	**SQM50.681A2**	10	68 s	98 s	8	**58.1**	---	---
BPZ:SQM53.442A2	**SQM53.442A2**	25	30 s	43 s	4	**58.2**	---	---

Type summary (other types are available on request) **(continued)**

SQM5 with premounted accessories only on request.

AC 220 V -15% ... AC 240 V +10%, 50…60 Hz ±6%

Standard types! (other versions on request)		Torque and holding torque 3)	Running time at 50 Hz for angular rotation 1)		Auxiliary switches incl. 2 end switches	Drive shaft version	Electronic module (integrated ex works) 5)	Potentiometer (integrated ex works) 6)
Article no.	Type	Max. Nm 2)	90°	130°	Piece	**AGA58.x**	**AGA56.x**	**ASZ…**
BPZ:SQM53.482A2	**SQM53.482A2**	20	30 s	43 s	8	**58.2**	---	---
BPZ:SQM53.482A2Z3	**SQM53.482A2Z3**	20	30 s	---	8	**58.2**	56.9A27	**12.30**
BPZ:SQM54.480A2	**SQM54.480A2**	25	30 s	43 s	8	--- [4])	**---**	---
BPZ:SQM54.482A2	**SQM54.482A2**	20	30 s	43 s	8	**58.2**	**---**	---
BPZ:SQM54.580A2	**SQM54.580A2**	25	45 s	65 s	8	--- [4])	**---**	**---**
BPZ:SQM56.680A2	**SQM56.680A2**	40	60 s	87 s	8	--- [4])	---	---
BPZ:SQM56.687A2	**SQM56.687A2**	40	60 s	87 s	8	**58.7**	**---**	---
BPZ:SQM56.687A2G3	**SQM56.687A2G3**	40	60 s	---	8	**58.7**	56.41A27	**12.30**
BPZ:SQM56.687A2Z3	**SQM56.687A2Z3**	40	60 s	---	8	**58.7**	56.9A27	**12.30**

Type summary (other types are available on request) **(continued)**

SQM5 with premounted accessories only on request.

AC 110 V -15%/+10%, 50…60 Hz ±6%

Standard types! (other versions on request)		Torque and holding torque 3)	Running time at 50 Hz for angular rotation 1)		Auxiliary switches incl. 2 end switches	Drive shaft version	Electronic module (integrated ex works) 5)	Potentiometer (integrated ex works) 6)
Article no.	Type	Max. Nm 2)	90°	130°	Piece	**AGA58.x**	**AGA56.x**	**ASZ…**
BPZ:SQM50.480A1	**SQM50.480A1**	15	34 s	49 s	8	--- [4])	---	---
BPZ:SQM50.480A1Z3	**SQM50.480A1Z3**	15	34 s	---	8	--- [4])	56.9A17	**12.30**
BPZ:SQM50.483A1Z3	**SQM50.483A1Z3**	15	30 s	---	8	**58.3**	56.9A17	**12.30**
BPZ:SQM50.680A1	**SQM50.680A1**	15	68 s	98 s	8	--- [4])	---	---
BPZ:SQM53.480A1	**SQM53.480A1**	25	30 s	43 s	8	--- [4])	---	---
BPZ:SQM53.482A1Z3	**SQM53.482A1Z3**	20	30 s	---	8	**58.2**	56.9A17	**12.30**
BPZ:SQM54.482A1	**SQM54.482A1**	20	30 s	43 s	8	**58.2**	---	---
BPZ:SQM56.687A1	**SQM56.687A1**	40	60 s	87 s	8	**58.7**	---	---
BPZ:SQM56.687A1Z3	**SQM56.687A1Z3**	40	60 s	---	8	**58.7**	56.9A17	**12.30**

AC 24 V -15/+10%, 50…60 Hz ±6%

Standard types! (other versions on request)		Torque and holding torque 3)	Running time at 50 Hz for angular rotation 1)		Auxiliary switches incl. 2 end switches	Drive shaft version	Electronic module (integrated ex works) 5)	Potentiometer (integrated ex works) 6)
Article no.	Type	Max. Nm 2)	90°	130°	Piece	**AGA58.x**	**AGA56.x**	**ASZ…**
BPZ:SQM50.454A8	**SQM50.454A8**	15	34 s	49 s	5	**58.4**	---	---
BPZ:SQM50.480A8	**SQM50.480A8**	15	34 s	49 s	8	--- [4])	---	---
BPZ:SQM50.483A8Z3	**SQM50.483A8Z3**	15	34 s	---	8	**58.3**	56.9A87	**12.30**
BPZ:SQM50.680A8	**SQM50.680A8**	15	60 s	87 s	8	--- [4])	---	---
BPZ:SQM53.480A8	**SQM53.480A8**	25	30 s	43 s	8	--- [4])	---	---

Type summary (other types are available on request) **(continued)**

SQM5 with premounted accessories only on request.

AC 110 V -15%/+10%, 60 Hz ±6%, UL-registered

Standard types! (other versions on request)		Torque and holding torque 3)	Running time at 50 Hz for angular rotation 1)		Auxiliary switches incl. 2 end switches	Drive shaft version	Electronic module (integrated ex works) 5)	Potentiometer (integrated ex works) 6)
Article no.	Type	Max. Nm 2)	90°	130°	Piece	**AGA58.x**	**AGA56.x**	**ASZ...**
BPZ:SQM50.260R1	**SQM50.260R1**	15	8 s	12 s	6	--- 4)	---	---
BPZ:SQM50.260R1G4	**SQM50.260R1G4**	15	8 s	12 s	6	--- 4)	**56.41A17**	**12.33**
S55452-D402-A100	**SQM50.260R1Z3**	10	10 s	---	4	--- 4)	**56.9A17**	**12.803**
BPZ:SQM50.360R1	**SQM50.360R1**	15	12 s	18 s	6	--- 4)	**---**	**---**
BPZ:SQM50.364R1G3	**SQM50.364R1G3**	15	12 s	---	6	**58.4**	**56.41A17**	**12.30**
BPZ:SQM50.460R1	**SQM50.460R1**	15	28 s	41 s	6	--- 4)	---	---
BPZ:SQM50.464R1G3R	**SQM50.464R1G3R**	15	34 s	---	6	**58.4**	**56.41A17**	**12.30**
BPZ:SQM50.480R1Z3	**SQM50.480R1Z3**	15	28 s	---	8	--- 4)	**56.9A17**	**12.30**
BPZ:SQM50.481R1	**SQM50.481R1**	10	28 s	41 s	8	**58.1**	**---**	**---**
BPZ:SQM53.460R1	**SQM53.460R1**	25	28 s	36 s	6	--- 4)	---	---
BPZ:SQM53.480R1G3	**SQM53.480R1G3**	25	28 s	---	8	--- 4)	**56.41A17**	**12.30**
BPZ:SQM53.480R1Z3	**SQM53.480R1Z3**	25	28 s	---	8	--- 4)	**56.9A17**	**12.30**
BPZ:SQM56.560R1	**SQM56.560R1**	40	37 s	54 s	6	--- 4)	---	---
BPZ:SQM56.660R1	**SQM56.660R1**	40	50 s	72 s	6	--- 4)	---	---
BPZ:SQM56.680R1Z3	**SQM56.680R1Z3**	40	50 s	---	8	--- 4)	**56.9A17**	**12.803**

The SQM5s are also CE-compliant and are identical in construction to the corresponding types in the range.

The actuators are

- also meet CE requirements
- are of the same basic design as the equivalent standard types

1) At 60 Hz frequency, running times are about 17 % shorter
2) Based on 250,000 position changes
3) Refer to AGA58.x drive shafts and torques depending on the voltage
4) AGA58.x drive shaft must be ordered separately
5) For details, refer to Data Sheet N7922
6) For details, refer to Data Sheet N7921

Accessories (must be ordered separately)

VKP40 proportional controlling element with mounting plate

- Proportional controlling element for mounting between threaded flanges in gas trains
- Refer to Data Sheet N7646.

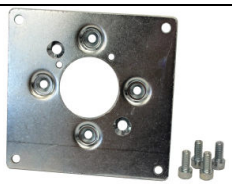

Mounting plate **ASK33.3**
Article no.: **BPZ:ASK33.3**
Larger mounting plate required to replace the existing mounting plate when using the SQM5 with AGA58.5 drive shaft.
Refer to data sheet N7646, chapter ‘Mounting instructions’

☞ Note
The required screws are included in the packaging for the ASK33.3 mounting plate.

VKF1x butterfly valve
Butterfly valves designed in intermediate flange design, for mounting into gas trains.
Refer to data sheet N7673.

Kit for shaft seal **AGA55.5**
Article no.: **BPZ:AGA55.5**

- For sealing the shaft feed through and therewith for perfecting the degree of protection
- Shaft seals on both sides for the SQM5
- Packed as kit together with O-rings inclusive mounting screws
- Refer to chapter ‘Mounting the AGA55.5 shaft seal kit on the SQM5’

☞ Note
Sealing of the shaft feedthrough.
The AGA55.5 shaft seal kit must not be mounted in connection with the ASK33.3 mounting plate. Failure to observe this may compromise the sealing of the shaft feedthrough.

Spacer **AGA57.1**
Article no.: **BPZ:AGA57.1**

- Adapter for SQM10/SQM20 actuator
- With the AGA57.1 spacer, an SQM5 actuator can be mounted instead of the SQM10/SQM20. The AGA57.1 spacer is required because, depending on the counterpart (damper/rod), the bearing of the AGA58.x drive shaft protrudes slightly on the SQM5

Refer to chapter ‘Mounting the AGA57.1 spacer on the SQM5’

Auxiliary (must be ordered separately) (continued)

AGA57.2 adapter for ME8 actuator
Article no.: **BPZ:AGA57.2**
With the AGA57.2 adapter, an SQM5 actuator can be mounted instead of an ME8.
Refer to chapter ‘Mounting the AGA57.2 or AGA57.3 adapter on the SQM5’.

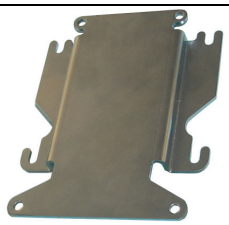

Adapter for Honeywell Mod. III actuator **AGA57.3**
Article no.: **BPZ:AGA57.3**
With the AGA57.3 adapter, an SQM5 actuator can be mounted instead of a Honeywell Mod. III.
Refer to chapter ‘Mounting the AGA57.2 or AGA57.3 adapter on the SQM5’.

Electronic modules **AGA56**

- For controlling the SQM5
- Modular installable, complete with mounting frame and fixing screws

For the **AGA56.1x** electronic module, refer to data sheet N7922 and chapter ‘Mounting instructions’.
For the **AGA56.4x** electronic module, refer to data sheet N7922 and chapter ‘Mounting instructions’.
For the **AGA56.9x** electronic module, refer to data sheet N7922 and chapter ‘Mounting instructions’.

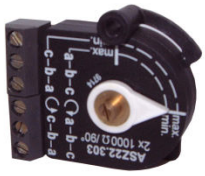

Potentiometers **ASZ**

- **ASZxx.3x** potentiometer, refer to chapter ‘Mounting the ASZ potentiometer on the SQM5’
- **ASZxx.7xx** potentiometer, refer to chapter ‘Mounting the ASZ potentiometer on the SQM5’
- **ASZxx.8xx** potentiometer, refer to chapter ‘Mounting the ASZ potentiometer on the SQM5’
- **ASZxx.9xx** potentiometer, refer to chapter ‘Mounting the ASZ potentiometer on the SQM5’

Refer to Data Sheet N7921

Auxiliary (must be ordered separately) (continued)

Drive shafts	Max. torque	Type no.	Order no.	
			Article no.	Type
∅ **10 mm on one side**, Woodruff key DIN 6888, corresponds to shaft on SQM10 actuator	10 Nm	1	**BPZ:AGA58.1**	**AGA58.1**
∅ **10 mm on one side**, Woodruff key DIN 6888, corresponds to shaft on SQM10 actuator, pack of 10	10 Nm	1	**BPZ:AGA58.1(10)**	**AGA58.1(10)**
∅ **12 mm on one side**, Woodruff key DIN 6888, corresponds to shaft on SQM20 actuator	20 Nm	2	**BPZ:AGA58.2**	**AGA58.2**
☐ **9 mm on two sides**, corresponds to shaft on ME8 actuator	25 Nm	3	**BPZ:AGA58.3**	**AGA58.3**
9.5 mm square, double-sided, equivalent to drive shaft of Honeywell Mod. III	30 Nm	4	**BPZ:AGA58.4**	**AGA58.4**
9.5 mm square, double-sided, equivalent to drive shaft of Honeywell Mod. III, packs of 10 pieces	30 Nm	4	**BPZ:AGA58.4(10)**	**AGA58.4(10)**
∅ **10 mm on one side**, D-shaped shaft end	10 Nm	5	**BPZ:AGA58.5**	**AGA58.5**
14 mm dia., single-sided with parallel key to DIN 6885, mandatory with SQM56	40 Nm	7	**BPZ:AGA58.7**	**AGA58.7**
14 mm dia., single-sided with parallel key to DIN 6885, mandatory with SQM56, packs of 10 pieces	40 Nm	7	**BPZ:AGA58.7(10)**	**AGA58.7(10)**
12 mm square, single-sided	30 Nm	9	**BPZ:AGA58.9**	**AGA58.9**

Refer to chapter ‘Mounting the AGA58.x drive shaft on the SQM5’.

Technical data

General unit data

Kind of current	AC
Operating voltage and operating frequency	Refer to chapter „Type summary“
Drive motor	Synchronous motor
Power consumption	20 VA
Angular rotation	Between 0° and max. 160° (scale range)
Mounting position	Optional
Degree of protection	IP54 (provided knockout holes remain closed for mounting or are closed off, with adequate cable entries)
Safety class	I
External overload fuse	Max. 6.3 AT (slow), to DIN EN 60127-2/5
Internal overload fuse	Max. 2 AT (slow), depending on the type
Cable entry	4 x Pg13.5 with thread
Wire cross-sectional area of the connecting wires, including earth terminal (PE)	0.5...2.5 mm²
Direction of rotation	Facing the gear train side: counterclockwise or clockwise (selectable) delivery: **counterclockwise**
Torque	Refer to diagram ‘Torques’ and chapter ‘Accessories for AGA58.x drive shafts’
Holding torque	Max. torque
Running time	10...90 s (refer to «Type summary») [1]
	1) Specifications apply to ambient temperatures of 23 °C and a mains voltage of 120 V AC or 230 V AC and a mains frequency of 50 Hz. With a mains frequency of 60 Hz, the running times are approx. 20% shorter. Torques lower by the same rate.
Pause time at change in direction of rotation	> 100 ms
End and auxiliary switches • Type • Switching voltage • Switching capacity	 To DIN 41636 AC 24...250 V To CEE 24 / VDE 0630 7.5 (3) A, AC 250 V
Number of end switches	2
Number of auxiliary switches	Max. 6, depending on the type
AGA58.x drive shaft	Replaceable
Weight	Approx. 3.3 kg
Temperature of the mounting surface	Max. 60 °C
Lifecycle	250,000 start cycles (OFF ⇨ ON ⇨ OFF) under load with the rated torque in the entire rotation angle range. 2,000,000 control cycles under load with 75% of rated torque in rotation angle range of 10°

Environmental conditions

Storage	EN 60721-3-1:1997
Climatic conditions	Class 1K2
Mechanical conditions	Class 1M2
Temperature range without installed AGA56 electronic module	-50...+60 °C
Humidity	<95 % r.h.
Transport	EN 60721-3-2;1997
Climatic conditions	Class 2K2
Mechanical conditions	Class 2M2
Temperature range without installed AGA56 electronic module	-50...+60 °C
Humidity	<95 % r.h.
Operation	EN 60721-3-3:1995 + A2:1997
Climatic conditions	Class 3K3
Mechanical conditions	Class 3M3
Temperature range without installed AGA56 electronic module	-20...+60 °C
Humidity	<95 % r.h.
Installation altitude	Max. 2,000 m above sea level

Caution!
Condensation, formation of ice and ingress of water are not permitted!
Failure to observe this poses a risk of damaging the safety functions and the risk of electric shock.

Conductive plastic potentiometer

Resistance	2*1000 Ω double potentiometer Maximum rotation angle, depending on the type
Operating voltage	10 V DC
Permissible hysteresis	0.3% of 90° or of 135°, depending on the type
Total resistance tolerance	± 20%
Effective rotation angle	90° or 135°
Connection terminal strip	3-pole
For a wire cross-section of ...	0.5...1 mm²
Wiper current rating	Max. 100 µA
Transfer resistance (Rü) of wiper contact	Max. ≤100 Ω
Linearity (based on total transfer resistance (Rges) = 1000 Ω)	±1%
Sleekness (alpha = 10°) / microlinearity	< 0.5%
Lifetime	Approx. 2 million actuation cycles

Connection diagram

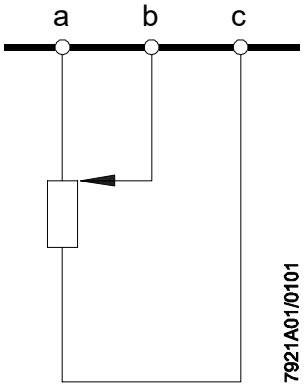

ASZ potentiometer shown in start position.

Terminal markings:
a = pickup at end of potentiometer
b = potentiometer wiper
c = pickup at end of potentiometer

Apply operating voltage to **«a»** and **«c»**. Conductive plastic ASZ potentiometers can be destroyed if operating voltage is applied between '**a → b**' or '**b → c**'.

Torques

SQM50

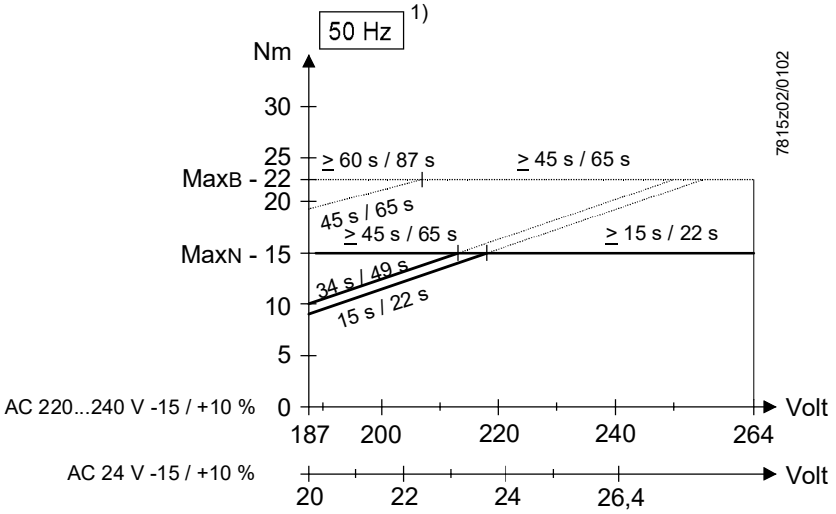

SQM53 / SQM54

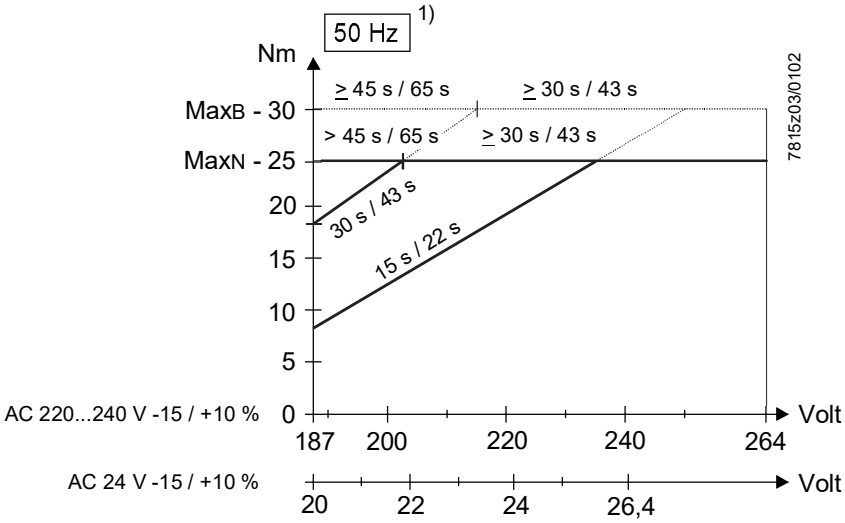

SQM56

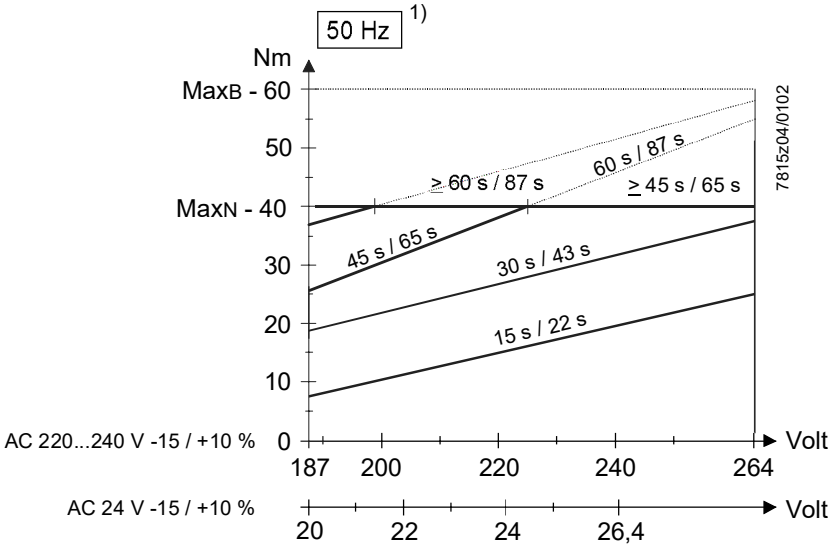

Torques (cont'd)

Legend

1) At 60 Hz frequency, running times are about 17 % shorter and torques are proportionally lower

With appropriate running time for 90° / 130°:

——— Torque in continuous operation

------- Release or starting torque = short-time torque

MaxN Max. permissible torque in continuous operation for all running times

MaxB Max. permissible release or starting torque for all running times

Note!
Each drive side is capable of delivering the maximum torque. However, the total torque of both sides must not exceed the maximum torque of the SQM5.

Connection terminals

Note
The illustration of the cam switches shows the mode of operation

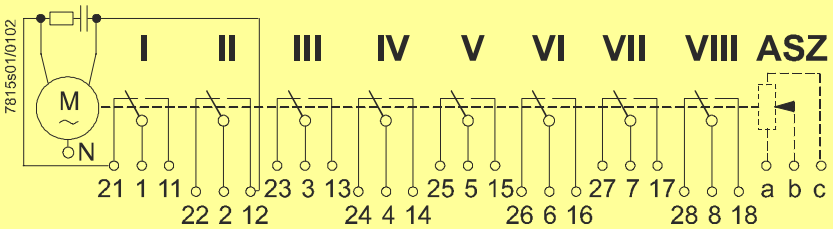

Diagram shows the maximum number of switches (2 end and 6 auxiliary switches). On versions with fewer than 6 auxiliary switches, the higher numbers are not used.

For example, the actuator version with 2 end and 2 auxiliary switches does not use switches V, VI, VII and VIII.

Note
Factory delivery 'Actuating position: Closed (0°)'
Cam switches II and III are already switched.

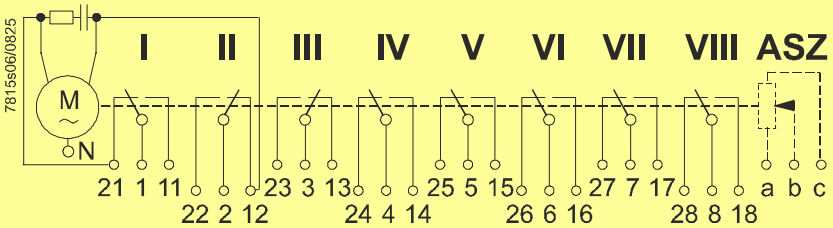

Factory delivery 'Actuating position: Open (90°)'
All cam switches are already switched.

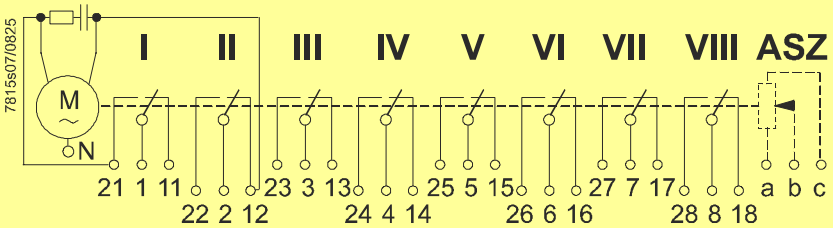

Direction of rotation

By exchanging the 2 motor connecting cables, the actuator's direction of rotation can be changed from counterclockwise to clockwise.

Counterclockwise rotation

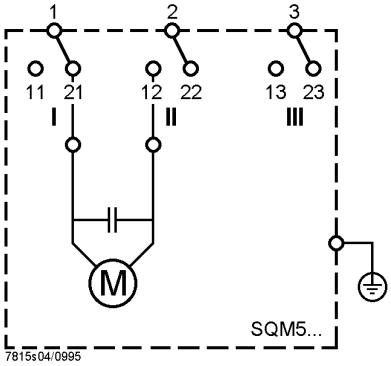

Clockwise rotation

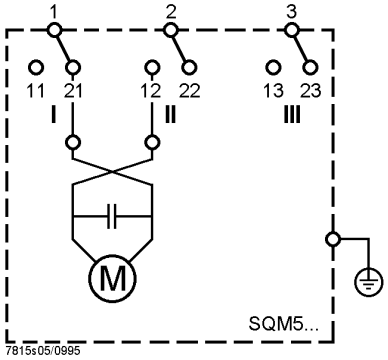

Note!
When changing the direction of rotation from counterclockwise to clockwise, the cams must be readjusted.

Clockwise rotation:
Red scales on the cam shaft, double arrow on the cams.

Counterclockwise rotation:
Black scales on the cam shaft, single arrow on the cams.

Note!
Ensure correct direction of rotation!
Delivery state: Counterclockwise

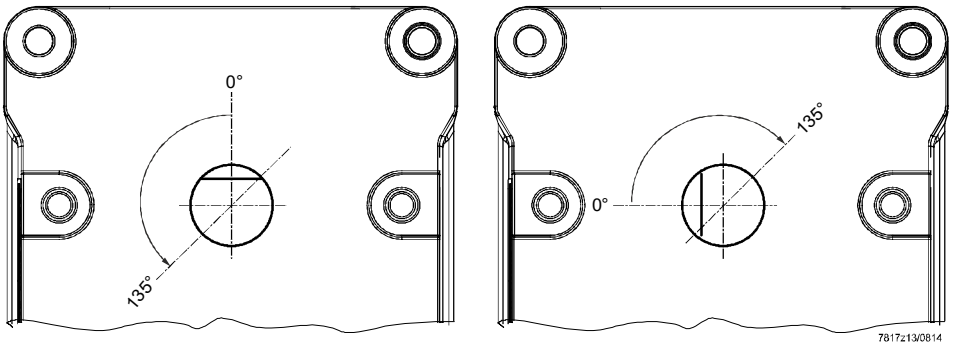

Dimensions in mm

SQM5...

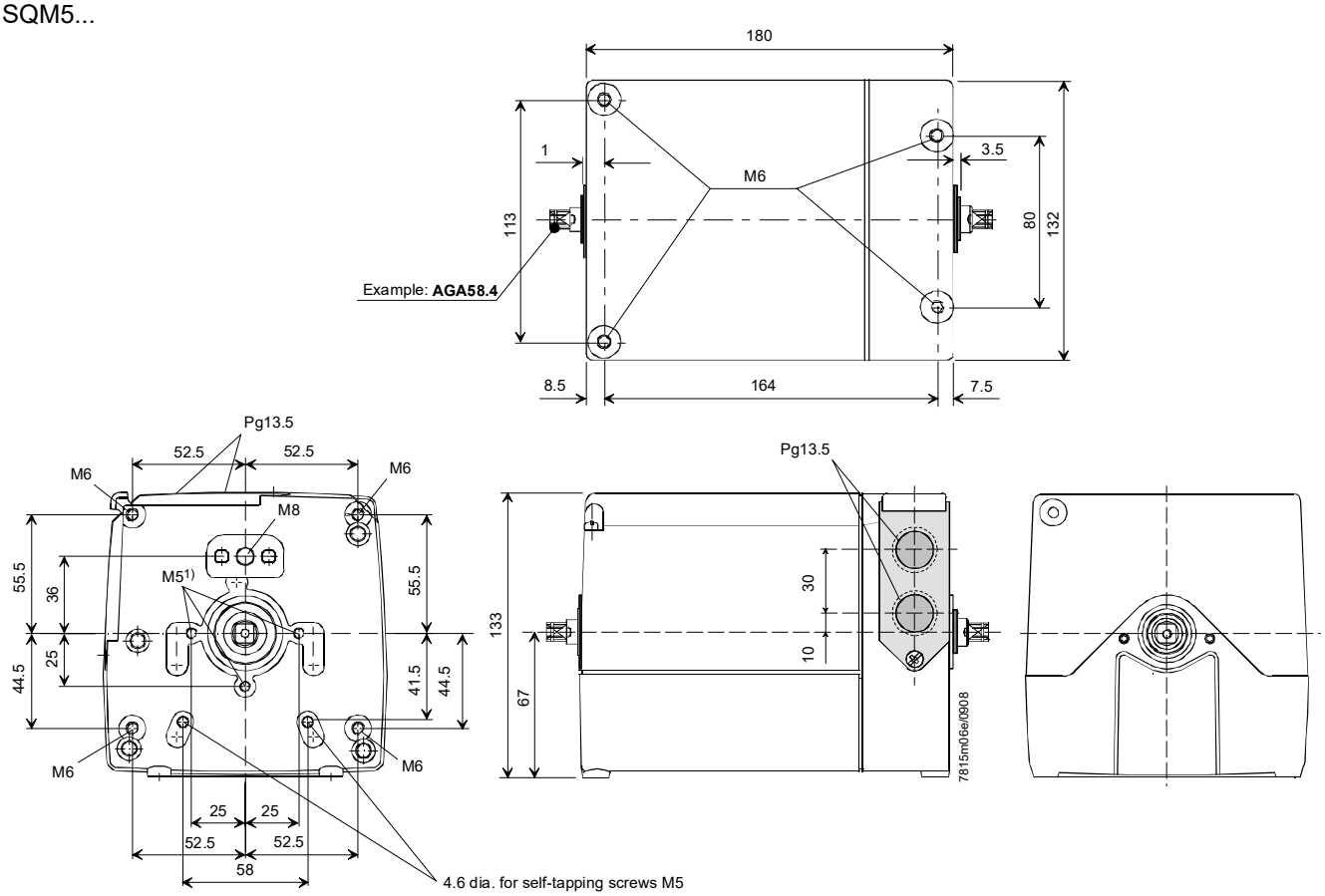

1) Identical to fixing points of SQM10 and SQM20 actuators

Dimensions in mm

AGA58.x drive shaft

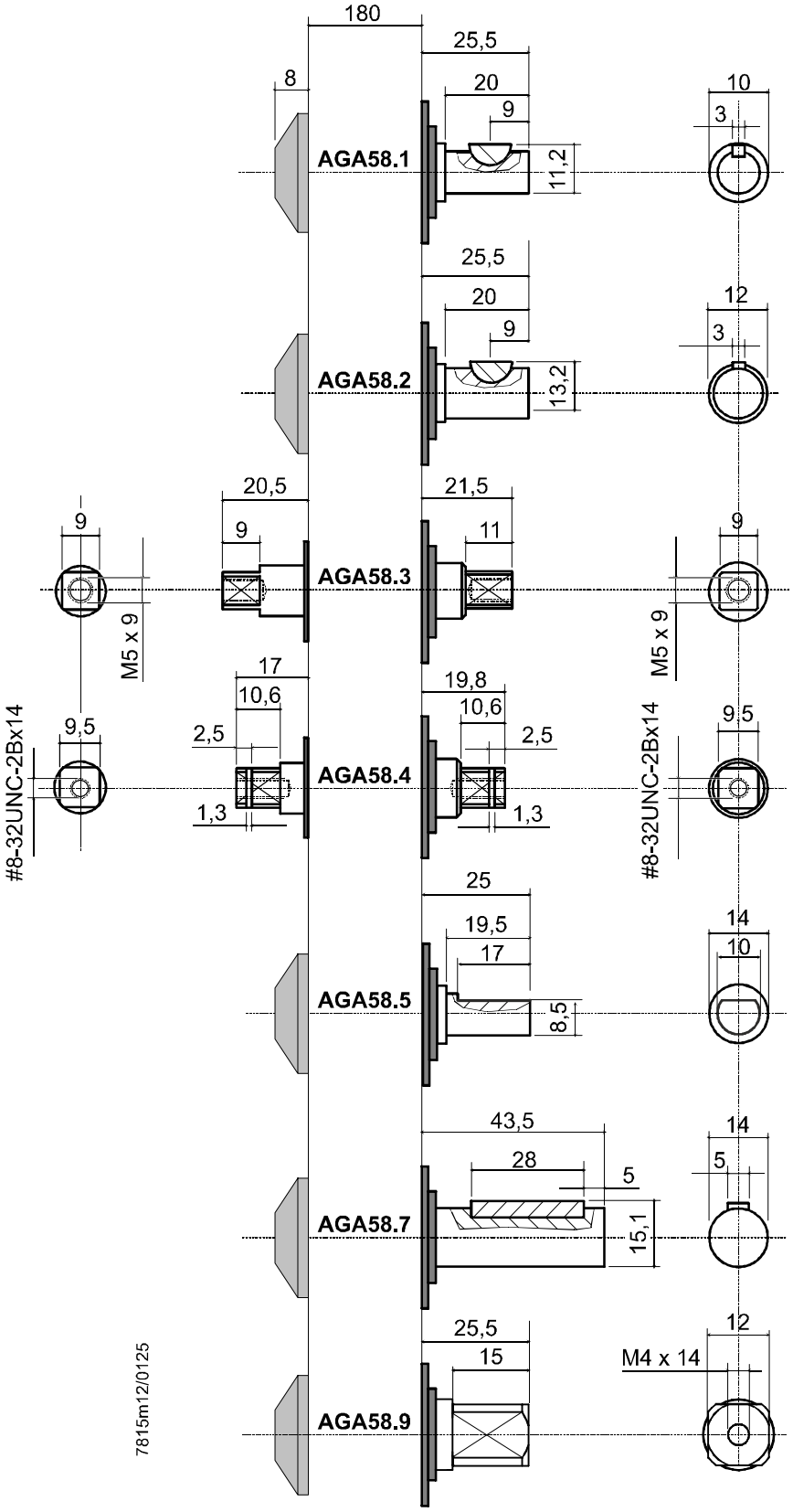

Dimensions in mm

AGA57.1 spacer

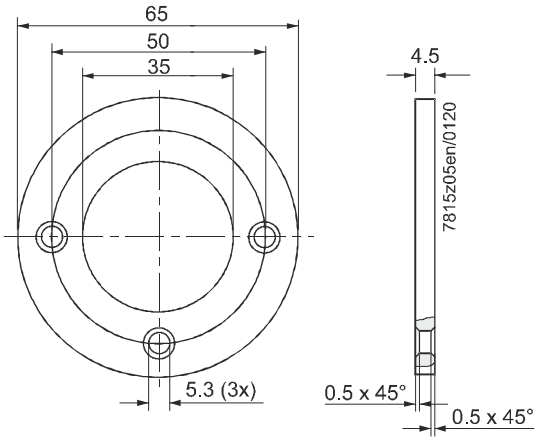

AGA57.2 adapter

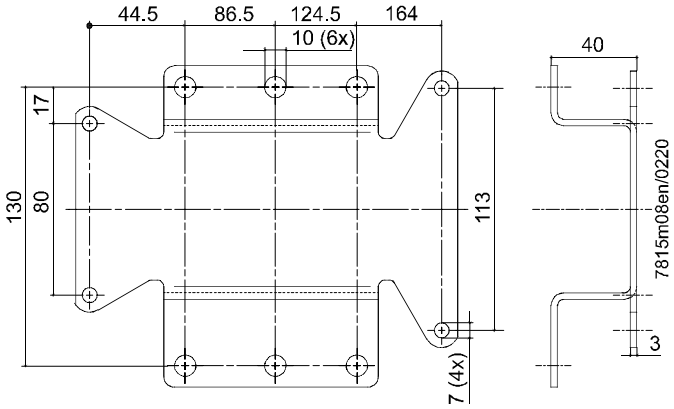

AGA57.3 adapter

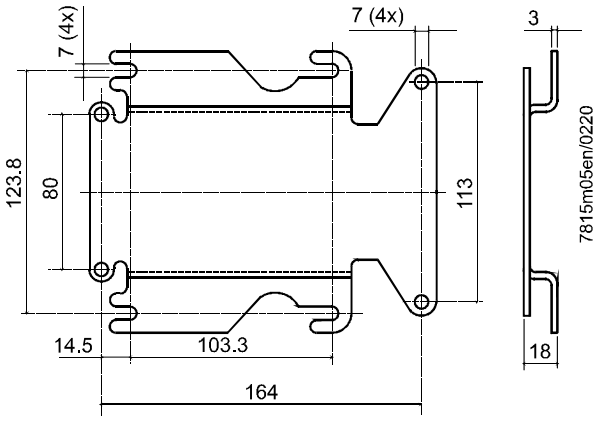

Setting the direction of rotation on the SQM5

Step 1

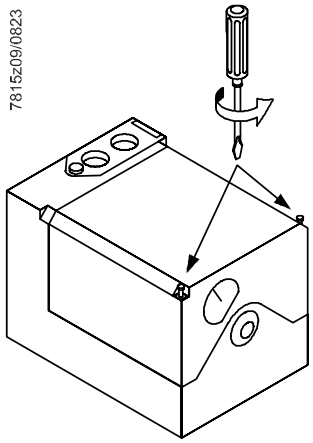

Step 2

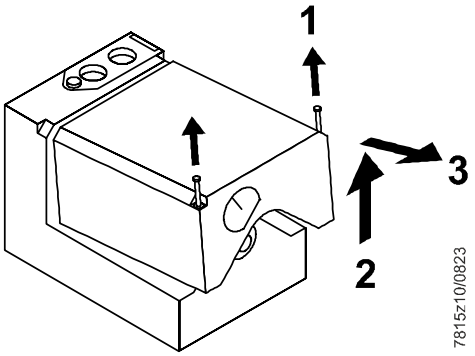

Step 3

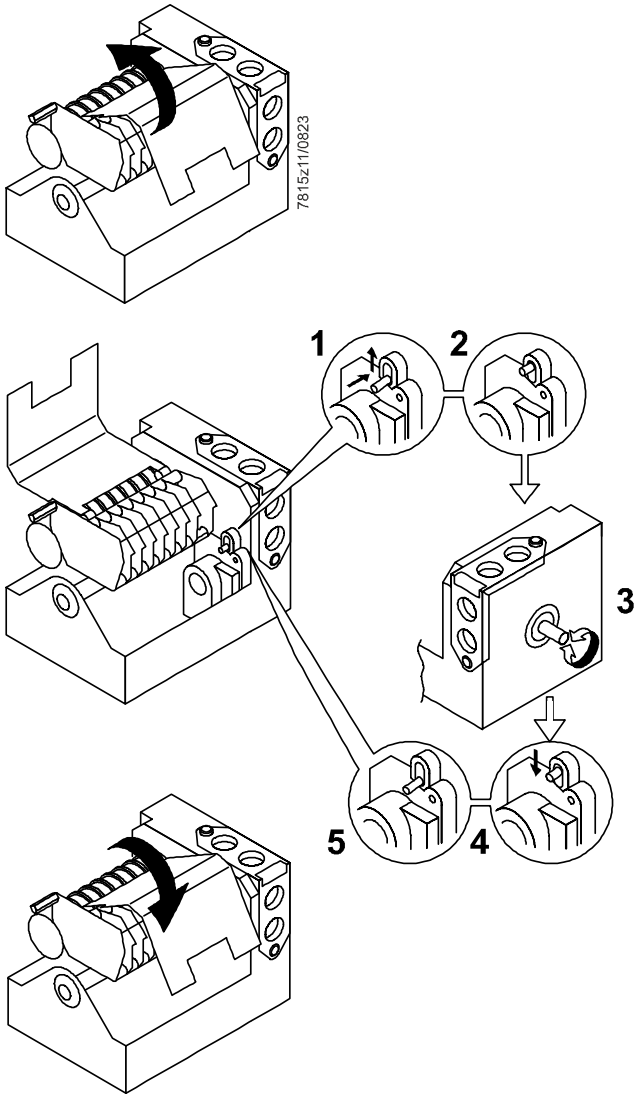

Step 4

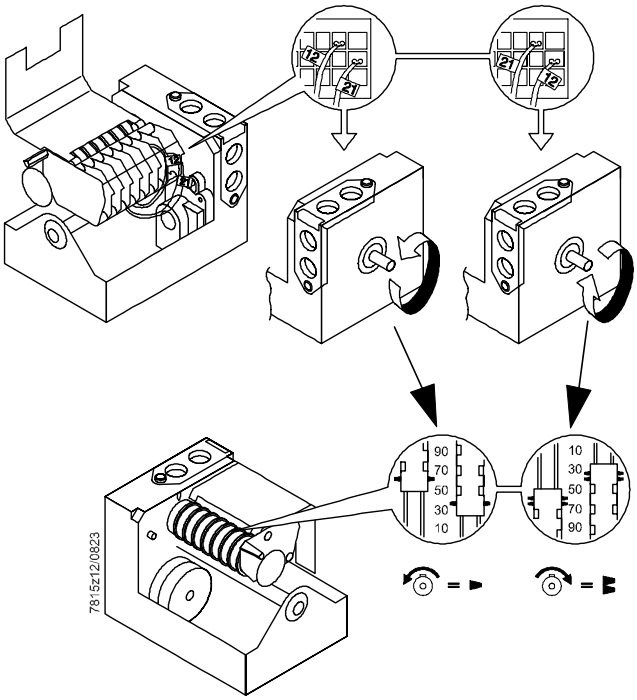

Step 5

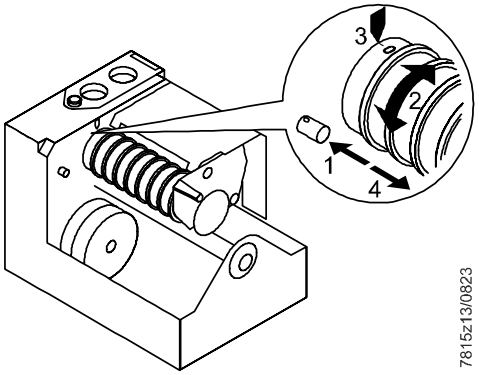

Step 6
(Only when used with AGA56.4 or AGA56.9 electronic module)

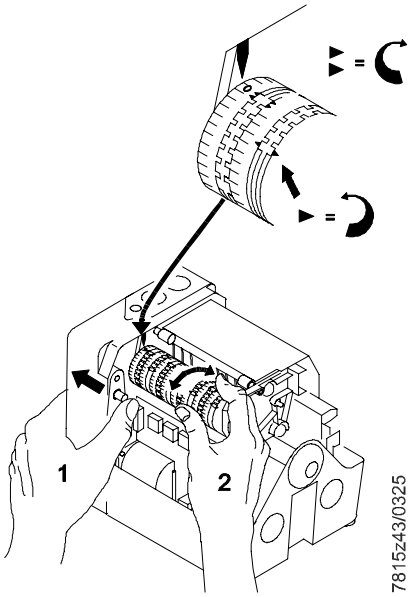

Direction of rotation **right**:
- Red scales on the camshaft
- Double arrow on the cam disks

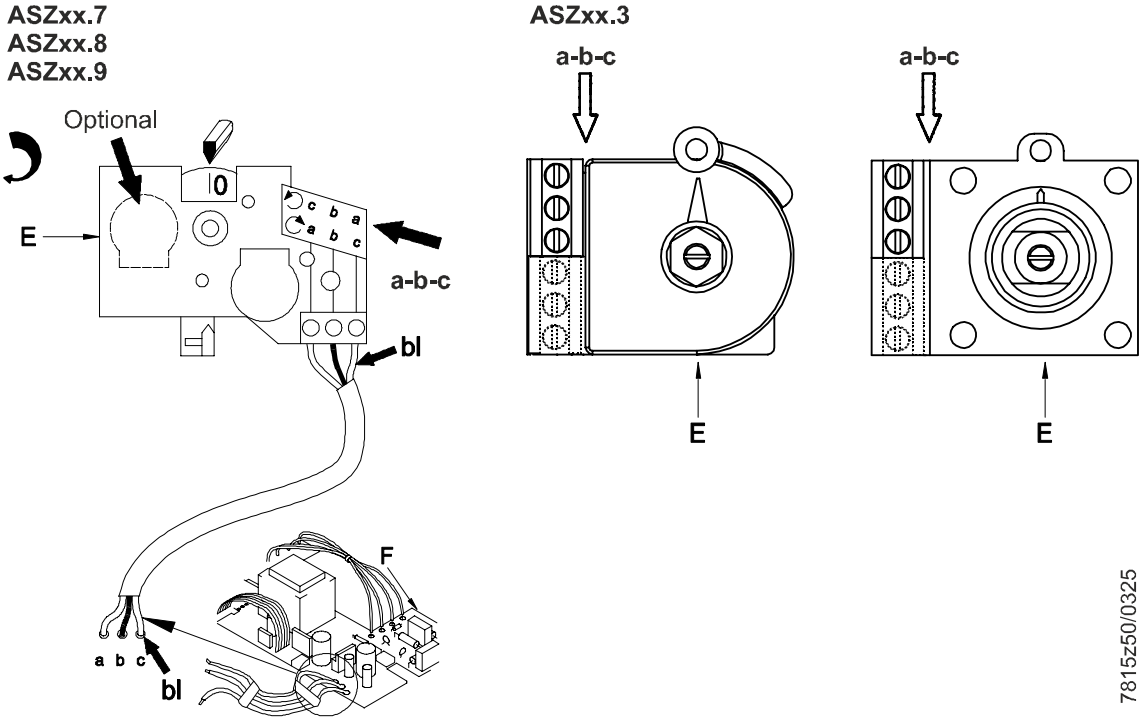

Direction of rotation **left**:

- Black scales on the camshaft
- Single arrow on the cam disks

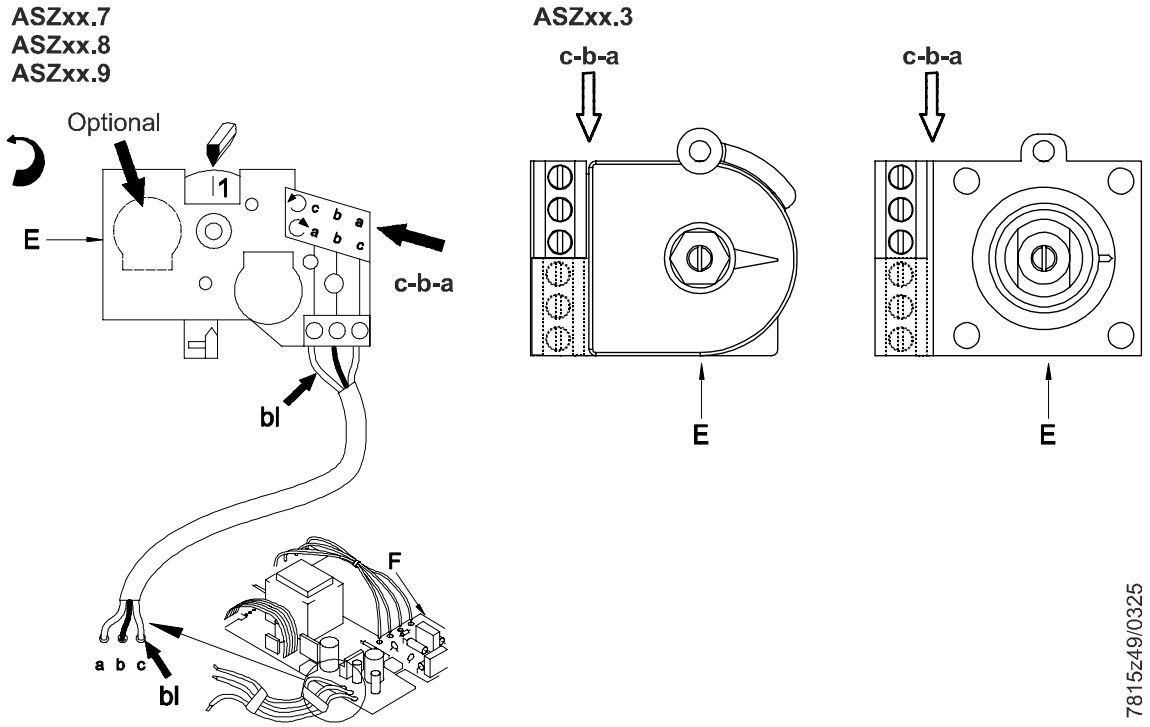

Step 7

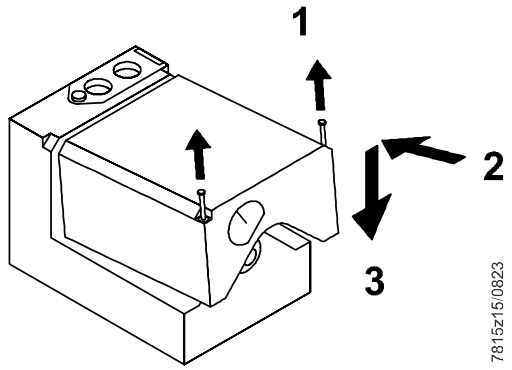

Step 8

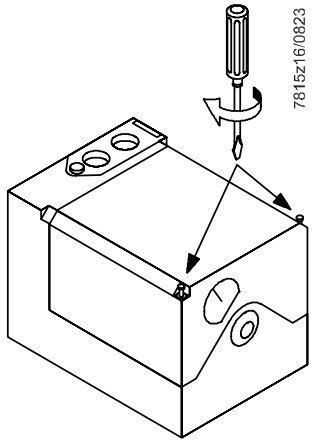

Mounting the ASZ potentiometer on the SQM5

Step 1

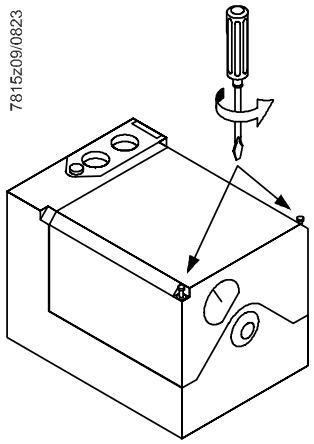

Step 2

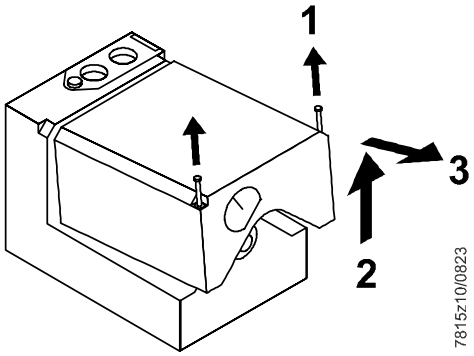

Step 3

(Only when used with AGA56.4 or AGA56.9 electronic module)

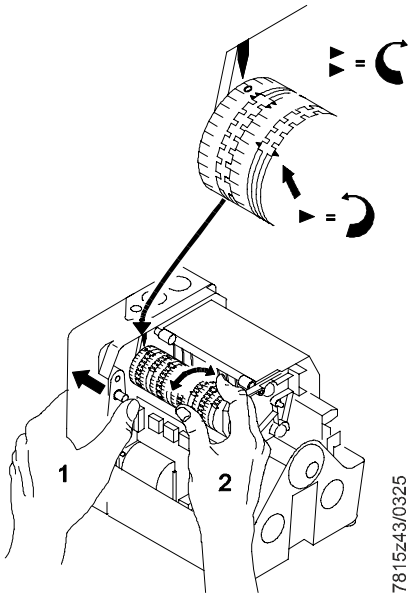

Step 4

ASZxx.7
ASZxx.8
ASZxx.9

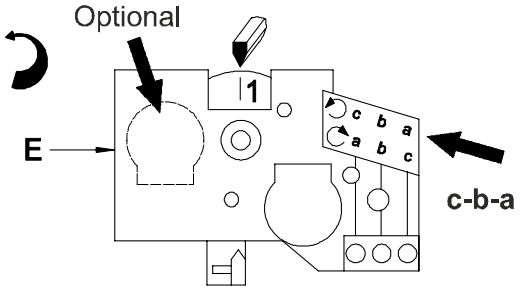

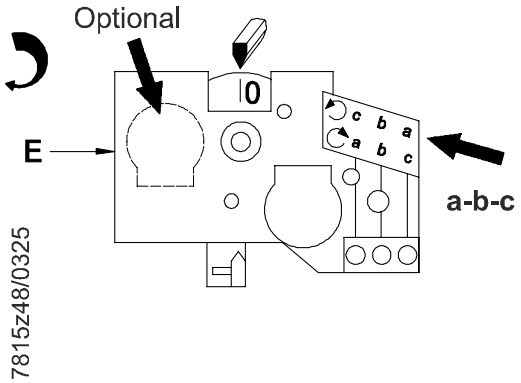

ASZxx.3

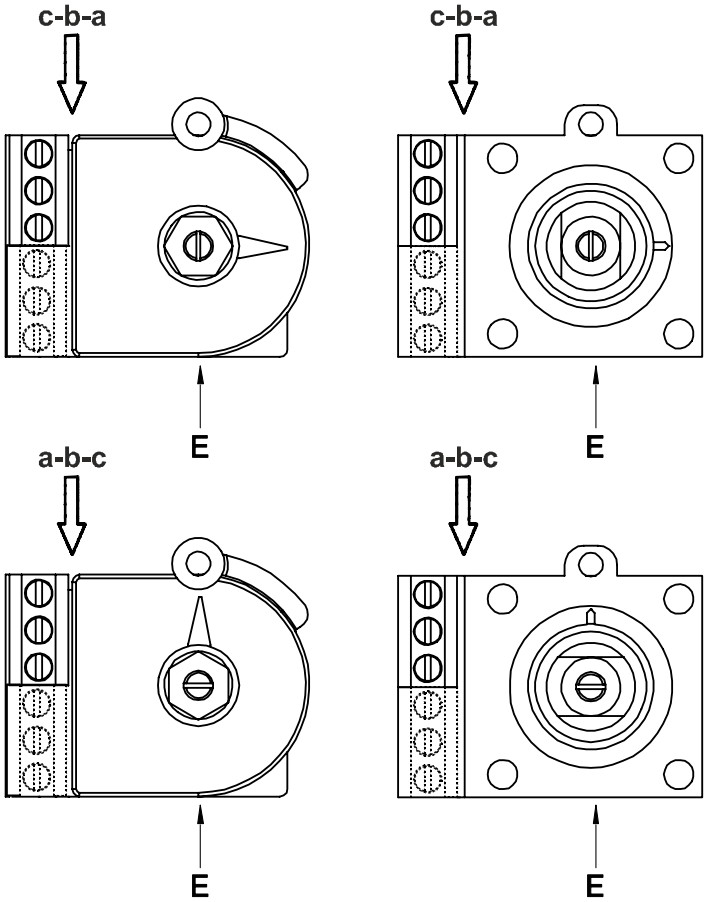

Step 5

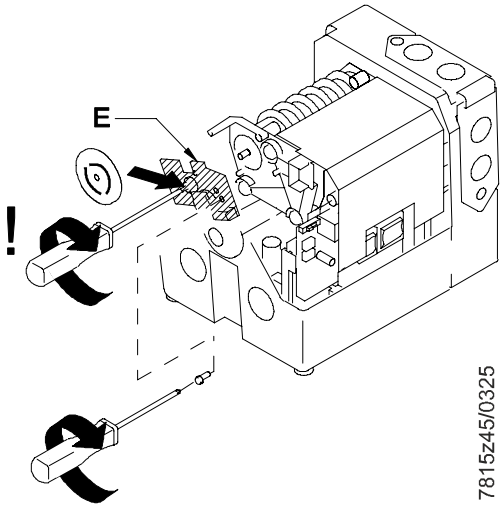

Step 6

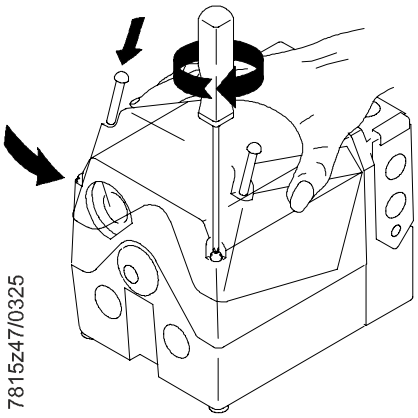

Mounting the AGA55.5 shaft seal kit on the SQM5

Scope of delivery

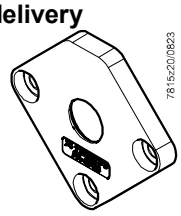

1x seal holder (front housing)

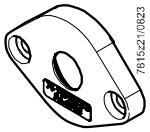

1x seal holder (lower housing)

3x M5x10 screws

2x M4x10 screws (thread-forming)

1x grease packet

1x O-ring
(36 x 2 NBR, Shore A 70)

1x O-ring
(27 x 2 NBR, Shore A 70)

1x O-ring
(14 x 2 NBR, Shore A 70)

1x O-ring
(12.1 x 1.6 NBR, Shore A 70)

1x shim washer
(DIN 988 12 x 22 x 0.5)

Step 1

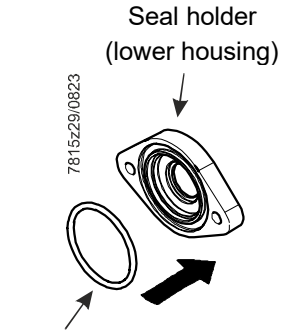

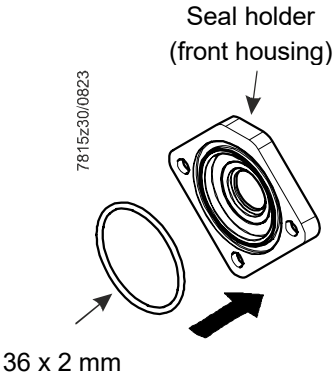

Step 2

- Grease the AGA58.x drive shaft (1)
- Push the O-ring onto the AGA58.x drive shaft (2)
- Push the AGA55.5 shaft seal kit onto the AGA58.x drive shaft and tighten the screws (3)

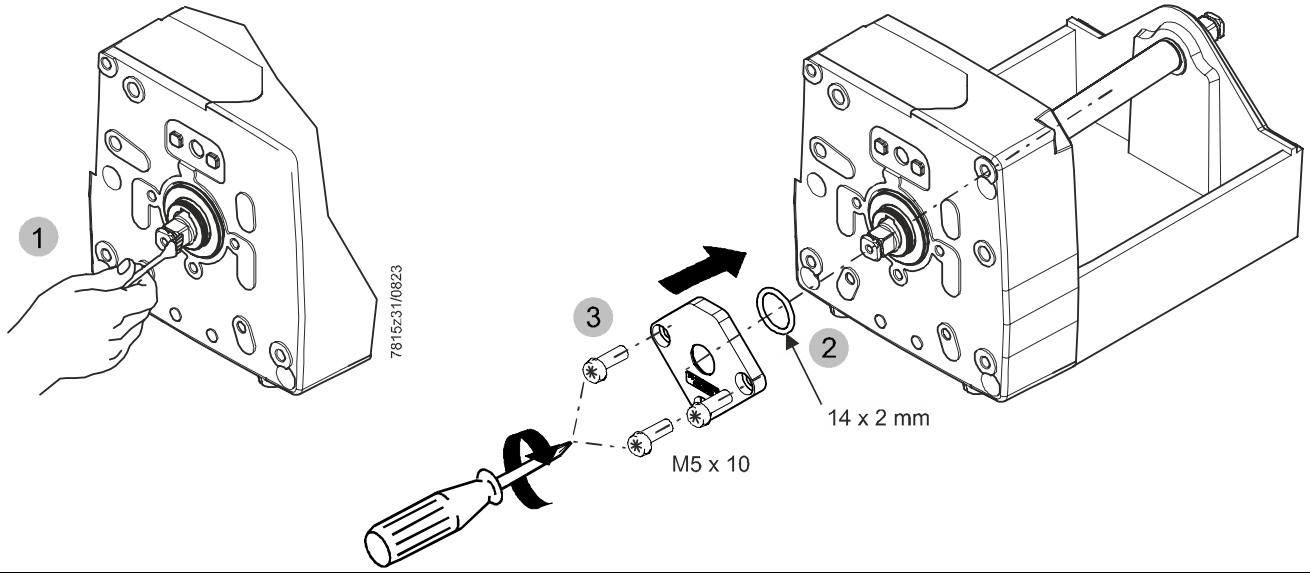

Step 3

- Optional (1)
- Grease the AGA58.x drive shaft (2)
- Push the shim washer onto the AGA58.x drive shaft (3)
- Push the O-ring onto the AGA58.x drive shaft (4)
- Push the AGA55.5 shaft seal kit onto the AGA58.x drive shaft and tighten the screws (5)

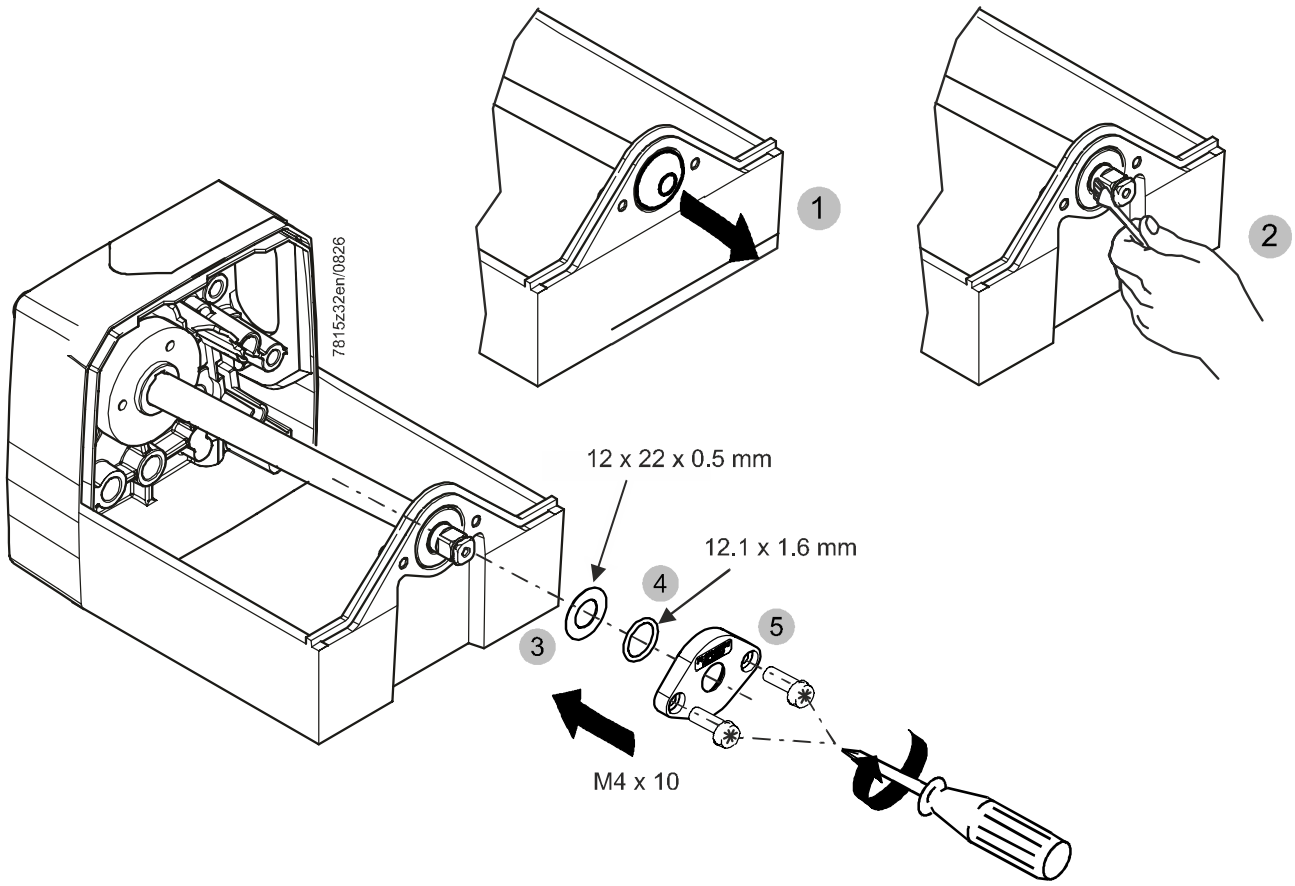

Mounting the AGA57.1 spacer on the SQM5

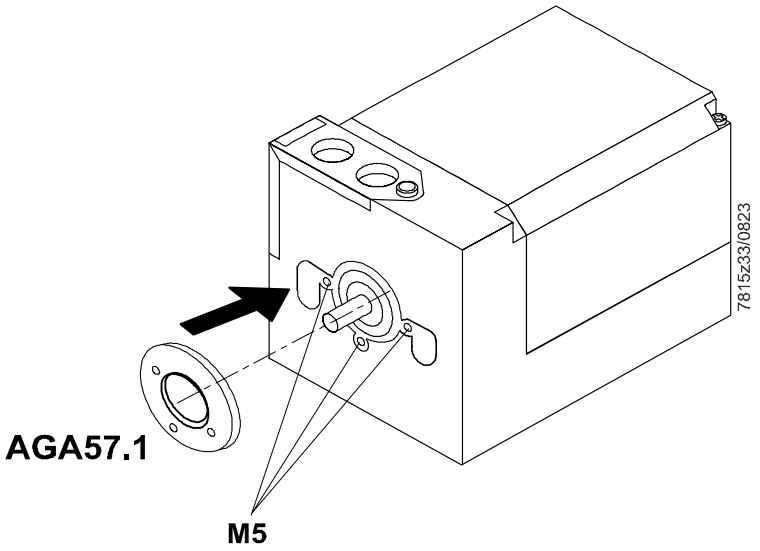

Mounting the AGA57.2 or AGA57.3 adapter on the SQM5

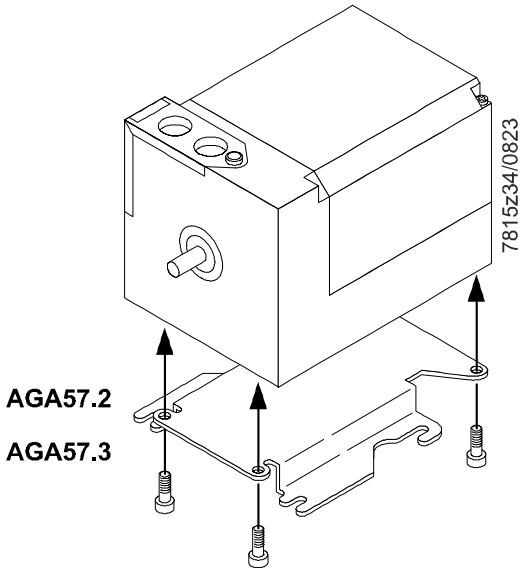

EU: M6

US: ¼-20 UNC

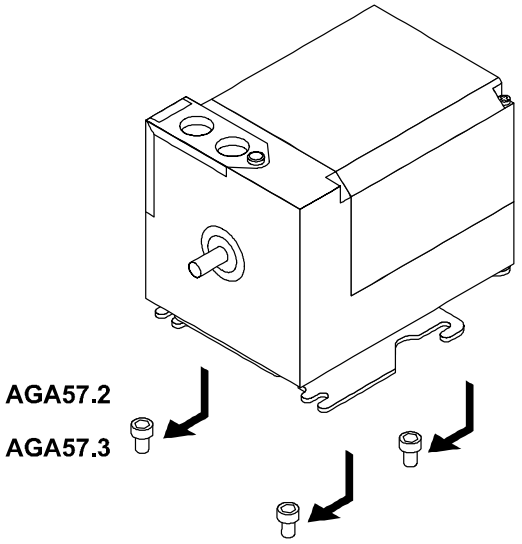

EU: M6

US: ¼-20 UNC

Mounting the AGA58.x drive shaft in the SQM5

AGA58.1 (4 259 9521 0)

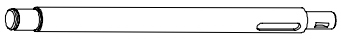

AGA58.2 (4 259 9522 0)

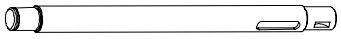

AGA58.3 (4 259 9523 0)

AGA58.4 (4 259 9526 0)

AGA58.5 (4 259 9527 0)

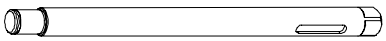

AGA58.7 (4 259 9524 0)

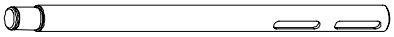

AGA58.9 (4 259 9532 0)

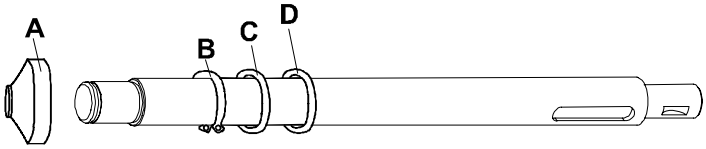

AGA58 + SQM5

1

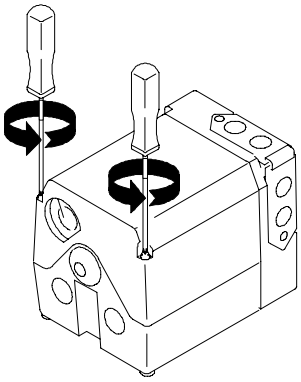

2

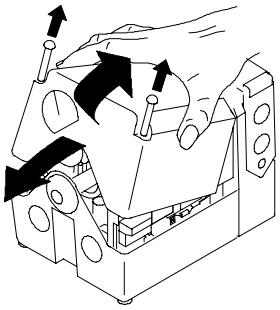

7815z54/0825

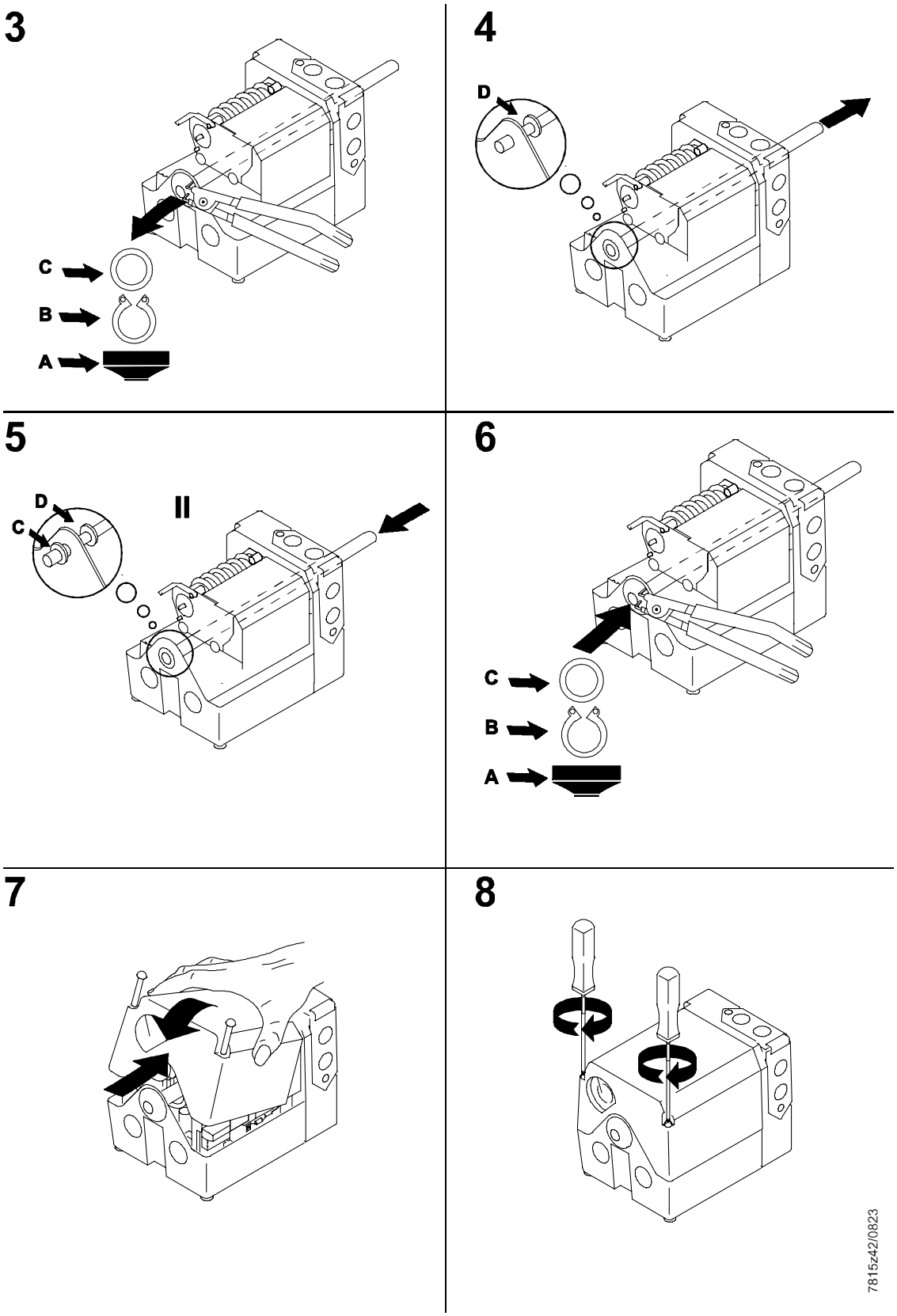

©2026 Siemens AG Smart Infrastructure, Berliner Ring 23, D-76437 Rastatt
Subject to change!