ENGINEERING
TOMORROW

Data Sheet

Pressure switch Type **KP**

The KP pressure switches can be used as safety switches against too low a suction pressure and / or too high a discharge pressure in refrigeration and air conditioning systems. They can also be used to start / stop compressors and fans for air-cooled condensers.

They are available in both single and dual versions and include a single pole double throw (SPDT) switch.

Features:

- Ultra-short bounce time thanks to snap-action function (reduces wear to a minimum and increases reliability)
- Available with gold-plated contacts
- SPDT switch design Offers open or close switching action on pressure rise or fall
- Fail safe double bellows Prevent refrigerant loss and system contamination - standard on KP 7 and KP 17 pressure switches
- Convenient manual trip feature To test electrical contact function - no tools needed
- Pressure wire connectors For easy electrical wiring
- No spade or lug terminals required
- Integral 1⁄2 NPSM swivel cable connector Allows direct attachment of 1⁄2 in male pipe thread connector
- Lockplate Prevents tampering with range and differential settings
- Universal mounting hole patterns

Product specification

Technical data

Table 1: Technical data

Features	Values
Ambient temperature	-40 – 149 °F (175 °F for maximum 2 hours)
Maximum working pressure	LP: MWP = 245 psig
	HP: MWP = 465 psig
Maximum test pressure	LP: p_e = 285 psig
	HP: p_e = 510 psig
Switch	Single pole changeover switch (SPDT)
Contact load	120 V AC: 16 FLA, 96 LRA
	240 V AC: 8 FLA, 48 LRA
	240 V DC: 12 W pilot duty
Terminal D, dual switches	240 V, 50 VA

Cable entry

Integral 1⁄2 in female NPSM swivel cable connector allows direct attachment of 1⁄2 in male pipe thread connector.

Enclosure

~NEMA 1

This grade of enclosure is obtained when the units **without** top cover are mounted on a flat surface or bracket. The bracket must be fixed to the unit so that all unused holes are covered.

~ NEMA 2

This grade of enclosure is obtained when the units **with** top cover are mounted on a flat surface or bracket. The bracket must be fixed to the unit so that all unused holes are covered

Table 2: Materials in contact with the medium

Control type	Material
KP 1, KP 2, KP 5, KP 7, KP 15, KP 17, KP 25	Tin bronze, no. CW452K, EN 1652 Nickel plated free cutting steel, no. 1.0737 / 1.0718 to EN 10277
KP with cap. tube	Copper SF-Cu, no. 2.0090 to DIN 1787

Electrical wiring

Table 3: Electrical wiring

Load	Signal option	Bellows movement on pressure rise	Bellows movement on pressure drop

Figure 1: Low or high pressure

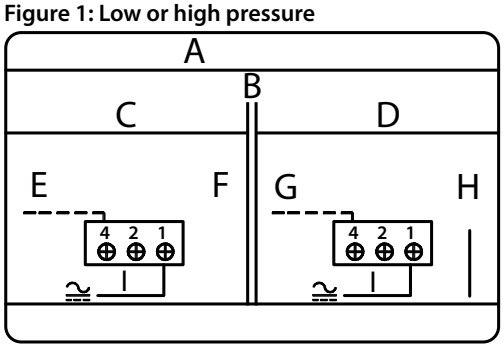

A	SPDT - signal pole double throw
B	Pressure / Temperature
C	Rise
D	Drop
E	Load Cut-in (term.1-4)
F	Load Cut-out (term.1-2)
G	Load Cut-out (term.1-4)
H	Load Cut-in (term.1-2)
I	Line

Dual (low and high) pressure, LP signal	Dual (low and high) pressure, LP and HP signal
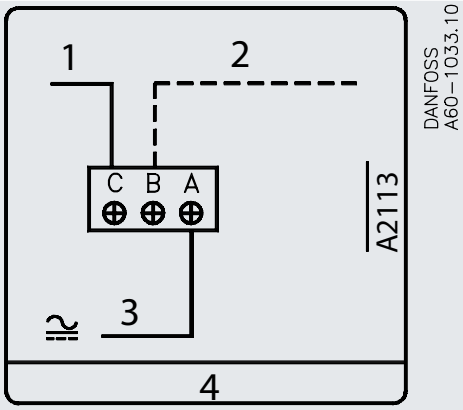	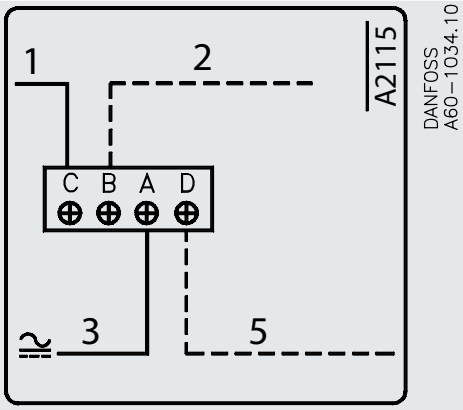

1.	Load	**4.**	Wiring instruction
2.	LP - signal option	**5.**	HP - signal option
3.	Line		

Low pressure, LP: KP 1 and KP 2	High pressure, HP: KP 5, KP 7W and KP 7B
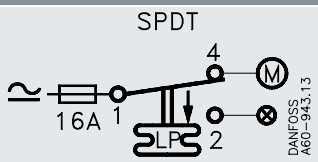	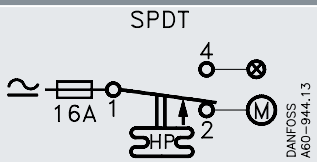

Dual (low and high) pressure: KP 15, KP 17W, KP 17B and KP 25	Dual (low and high) pressure: KP 15, KP 17W, KP 17B and KP 25
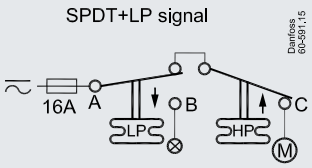	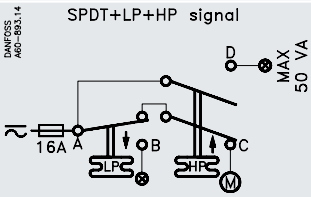

Metric conversions
1 psi = 0.07 bar
5⁄9 (t_1 °F - 32) = t_2 °C

Design

Table 4: Design

Pressure switch, type KP	KP 1, KP 2, KP 5
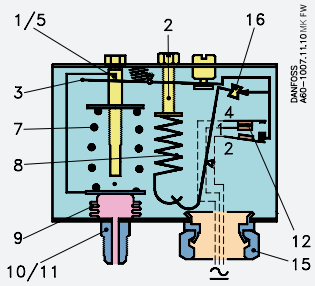	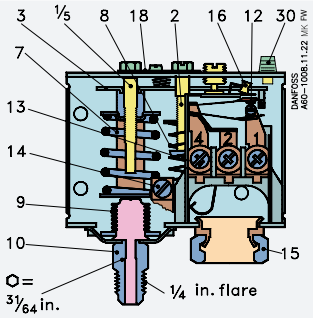
KP 15, KP 25 flare	**KP 1, KP 2, KP 5, KP 15, KP 25, KP 7W, KP 7B, KP 17W, capillary tube**
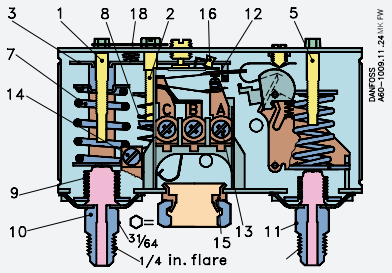	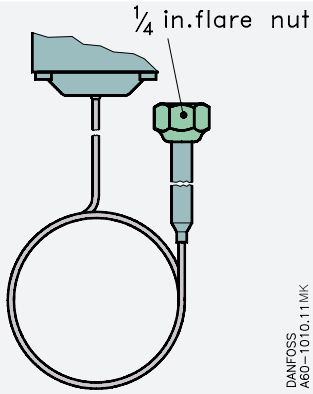

1.	Low pressure setting spindle, (LP)	**12.**	Switch
2.	Differential setting spindle	**13.**	Terminals
3.	Main arm	**14.**	Earth terminal
5.	High pressure setting spindle, (HP)	**15.**	Cable entry
7.	Main spring	**16.**	Tumbler
8.	Differential spring	**18.**	Locking plate
9.	Bellows	**19.**	Arm
10.	LP connection	**30.**	Reset button
11.	HP connection		

The switch in the KP has a snap-action function where the bellows move only when the cut-in or cut-out value is reached.

The bellows are connected to the low or high pressure side of the system through connection (10) or (11).

The design of the KP gives the following advantages:
- high contact load
- ultra-short bounce time
- high resistance to pulsation
- vibration resistance up to 4 g in the range 0 – 1000 Hz
- long mechanical and electrical life

KP 7W (KP 7B), flare

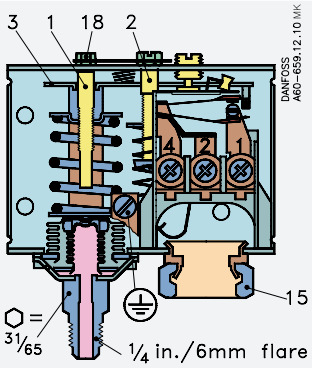

KP 17W (KP 17B), flare

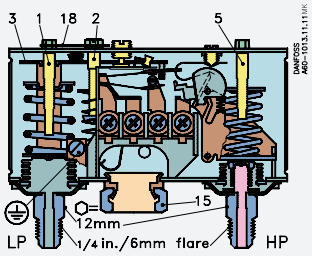

KP 7W (KP 7B), capillary tube

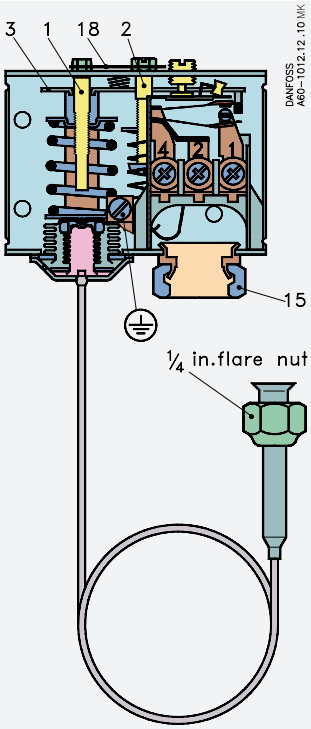

1.	Pressure setting spindle, (LP)	**5.**	Pressure setting spindle, (HP)
2.	Differential setting spindle	**15.**	Cable entry
3.	Main arm	**18.**	Locking plate

The KP with designations W or B have been tested and approved by TÜV (Germany) in accordance with EN 12263.

Versions with designation W will cut in automatically when the pressure has fallen to the setpoint minus the differential.

Versions with designation B can be cut in manually using the external reset button when:
KP 1 – the pressure has increased to 10 psi above the setpoint.
KP 7 – the pressure has fallen 58 psi below the setpoint.

KP 7 and KP 17 are equipped with fail-safe double bellows; a regulation bellows and an outer bellows. The double bellows system protects against loss of system charge in the event of a bellows rupture.

A rupture in the outer bellows will cause the control to trip approximately 43 psi lower than the actual control setting. This features provides a warning without a loss of charge.

All KP pressure switches, including those which are PED-approved, operate independently of changes in the ambient temperature around the control housing. Therefore the set cut-out pressure and differential are kept constant provided the permissible ambient temperatures are not exceeded.

Terminology

Reset
1.Manual reset: Units with manual reset can only be reset during operation by activation of the reset button.
2.Automatic reset: After operational stop, these units reset automatically.

Maximum working pressure
The Maximum working pressure is determined by the pressure that can be safely allowed in the refrigerating system or any of the units within it. The maximum working pressure is designated MWP.

Test pressure
The test pressure is the pressure used in strength tests and / or leakage tests on refrigerating systems or individual parts in systems. The test pressure is designated Pe.

"Snap function"
A certain contact force is maintained until irrevocable "snap" is initiated. The time during which the contact force approaches zero is thus limited to a very few milliseconds. Therefore contact bounce cannot occur as a result of, for example, slight vibrations, before the cut-out point. Contact systems with "Snap function" will change over even when micro-welds are created between the contacts during cut-in. A very high force is created during cut-out to separate the contacts. This force immediately shears off all the welds. Thus the cut-out point of the unit remains very accurate and completely independent of the magnitude of the current load.

Setting

Pressure switches with automatic reset – LP: Set the LP start pressure on the "CUT-IN" scale (range scale). One rotation of the low pressure spindle ~10 psi. Set the LP differential on the "DIFF" scale. One rotation of the differential spindle ~ 3 psi. The LP cut-out pressure is the LP cut-in pressure minus the differential.

NOTE:
The LP cut-out pressure must be above absolute vacuum pe = 30 in Hg. If compressor will not stop at low cut-out pressure, check whether the differential value is set at too high a value!

Metric conversions 1 psi = 0.07 bar

Pressure switches with automatic reset – HP: Set the HP cut-out pressure on the "CUT-OUT" scale. One rotation of the HP spindle ~ 33 psi. Set the HP differential on the "DIFF" scale.

One rotation of the differential spindle ~ 4 psi. The HP cut-in pressure is the HP cut-out pressure minus the differential. Pressure switches with manual reset. Set the cut-out pressure on "CUT-OUT" scale (range scale). Low pressure controls can be manually reset when the pressure is equal to the cut-out pressure plus the differential.

High pressure switches can be manually reset when the pressure is equal to the cut-out pressure minus the differential.

Cut-in and cut-out pressures for both the LP and HP sides of the system should always be checked with an accurate pressure gauge.

Dimensions [in] and weight [lb]

Table 5: Flare connection

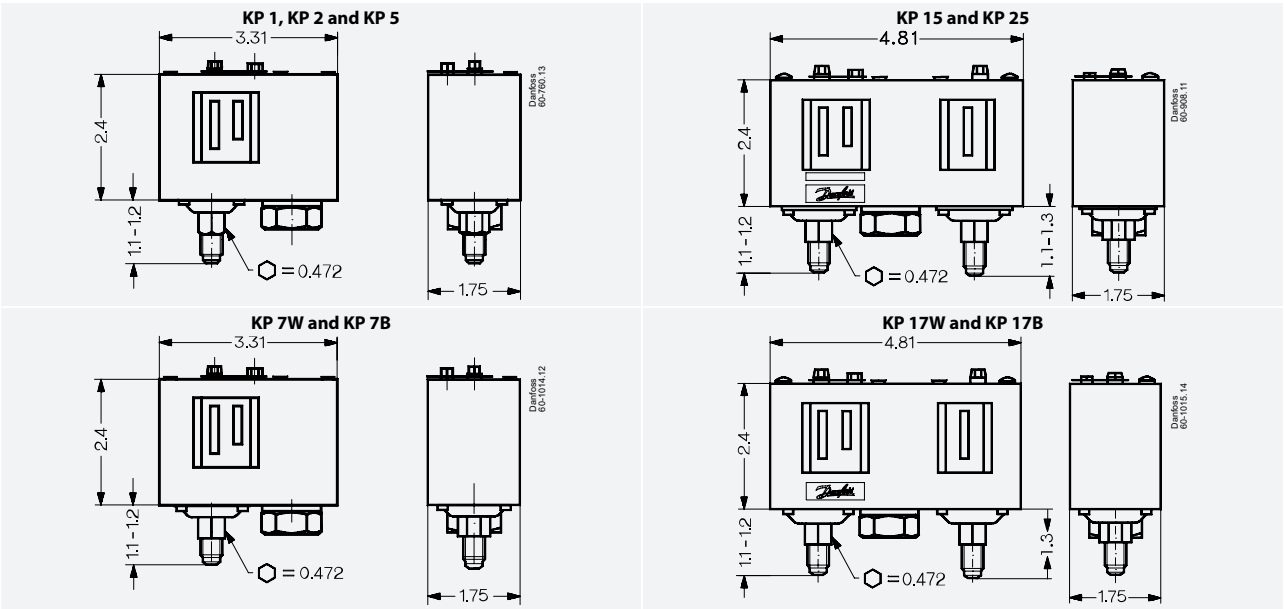

Table 6: Capillary tube connection

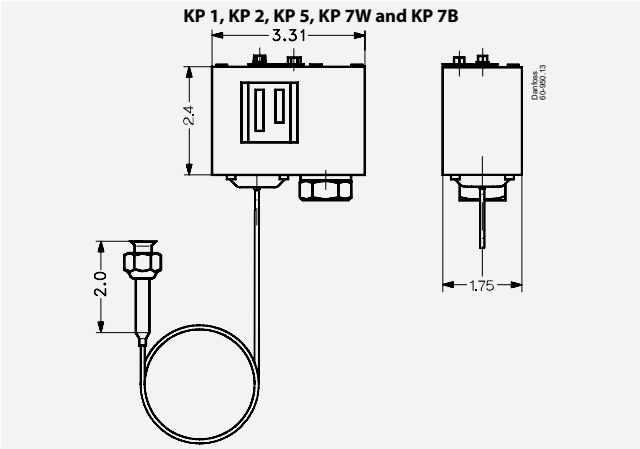

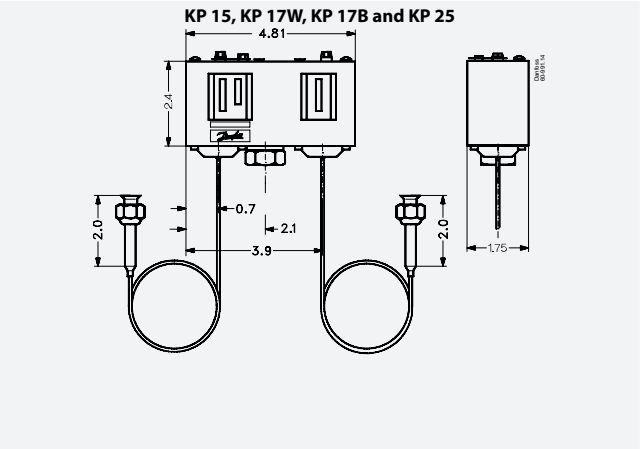

Net weight:
KP 1, KP 2, KP 5 and KP 7:
approx. 0.7 lbs.
KP 15, KP 17 and KP 25:
approx. 1.1lbs.

Metric conversions:
1 in = 25.5 mm
1 lb = 0.454 kg

Table 7: KP switches, rear side

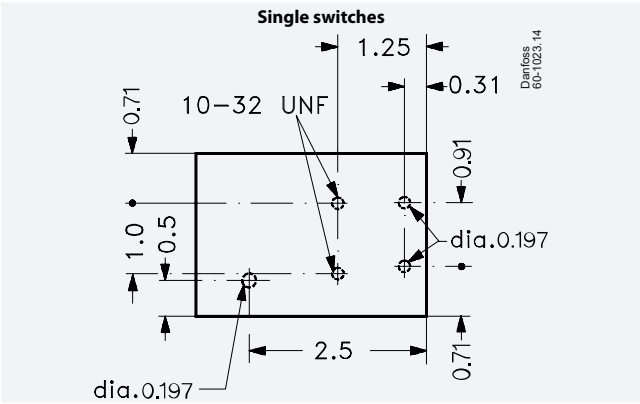

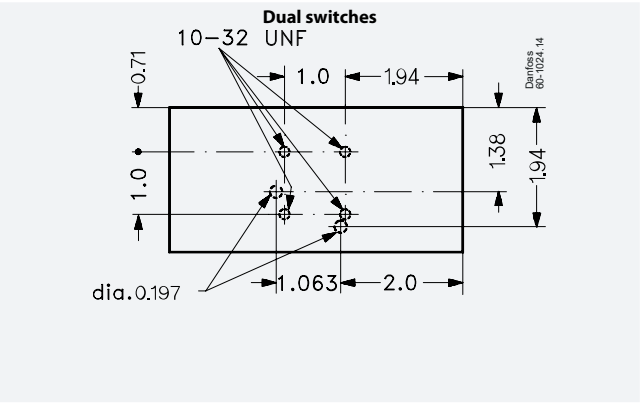

Table 8: Bracket dimensions

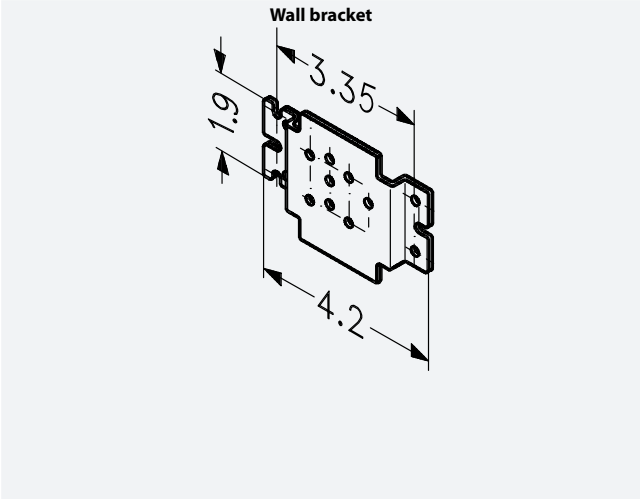

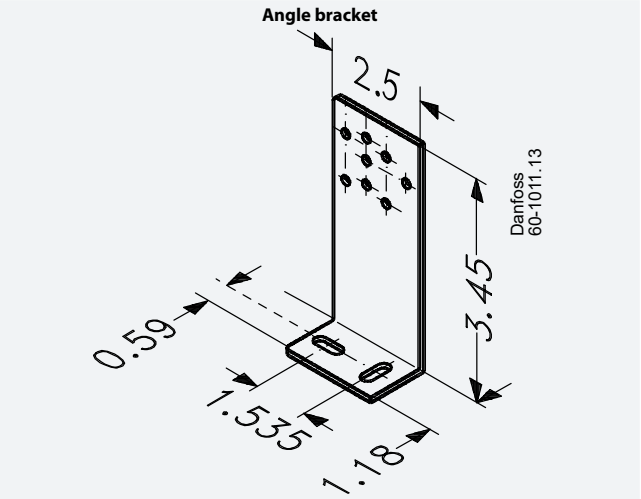

Ordering

Figure 2: Ordering

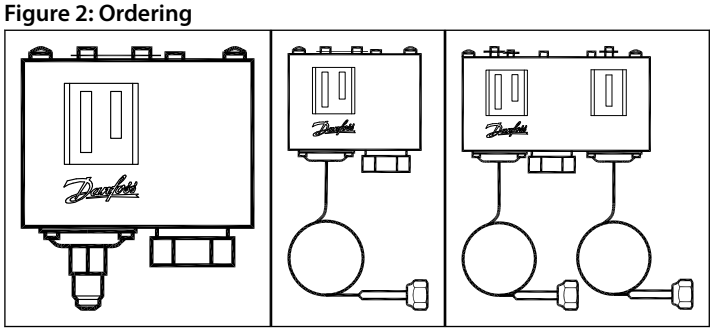

For R22, R134a, R404A, R407A, R407C, R407F, R422B, R422D, R448A, R449A, R450A, R452A, R507A, R513A

For complete list of approved refrigerants, visit www.products.danfoss.com and search for individual code numbers, where refrigerants are listed as part of technical data.

Table 9: Ordering

Type	Pressure	Low pressure (LP)		High pressure (HP)		Reset		Contact functio	Code no.	
		Regulating range	Differential Δp	Regulating range	Differential Δp	Low pres-sure	High pres-sure		connection	
		[inHg] [psig]	[psi]	[psig]	[psi]	[LP]	[HP]		1/4 in flare	Cap. tube w. 1/4 in flare nut 36 in
KP 1	Low	6 in – 108	10 – 58	–	–	Auto	–	SPDT	060-200191	–
KP 1	Low	6 in – 108	10 – 58	–	–	Auto	–	SPDT	–	060-205191
KP 1	Low	27 in – 100	10	–	–	Man. (Min.)	–	SPDT	–	060-205291[1]
KP 2	Low	6 in – 50	6 – 32	–	–	Auto	–	SPDT	–	060-206391
KP 5	High	–	–	115 – 465	25 – 85	–	Auto	SPDT	060-201491	–
KP 5	High	–	–	115 – 465	25 – 85	–	Auto	SPDT	–	060-206491
KP 7W[2]	High	–	–	115 – 465	58 – 140	–	Auto	SPDT	060-200391	–
KP 7W [2]	High	–	–	115 – 465	58 – 140	–	Auto	SPDT	–	060-205391
KP7B [2]	High	–	–	115 – 465	58	–	Man. (Max.)	SPDT	060-200491	–
KP7B [2]	High	–	–	115 – 465	58	–	Man. (Max.)	SPDT	–	060-205491
KP 15	Dual	6 in – 108	10 – 58	115 – 465	58	Auto	Auto	SPDT/w. L P signal	060-200891	–
KP 15	Dual	6 in – 108	10 – 58	115 – 465	58	Auto	Auto	SPDT/w. L P signal	–	060-205891
KP 15	Dual	6 in – 108	10 – 58	115 – 465	58	Auto	Man. (Max.)	SPDT/w. L P signal	–	060-205991
KP 15	Dual	6 in – 108	10 – 58	115 – 465	58	Man. (Min.)	Man. (Max.)	SPDT/w. L P signal	–	060-206091
KP 15	Dual	6 in – 108	10 – 58	115 – 465	58	Auto	Auto	SPDT/w. LP + HP signal	–	060-203191
KP 15	Dual	6 in – 108	10 – 58	115 – 465	58	Auto	Man. (Max.)	SPDT/w. LP + HP signal	060-202691	–
KP 17W [2]	Dual	6 in – 108	10 – 58	115 – 465	58	Auto	Auto	SPDT/w. LP + HP signal	–	060-202991

[1] With dial knob
[2] With fail safe double bellows

Metric conversions

1 psi = 0.07 bar
5⁄9 (t_1 °F - 32) = t2 °C

Certificates, declarations, and approvals

The list contains all certificates, declarations, and approvals for this product type. Individual code number may have some or all of these approvals, and certain local approvals may not appear on the list.

Some approvals may change over time. You can check the most current status at danfoss.com or contact your local Danfoss representative if you have any questions.

Table 10: Certificates, declarations, and approvals

Document type	Approval authority
UL certificate	UL
EAC document	EAC
EU declaration	Danfoss
CCC declaration	Danfposs
Quality - Assurance Certificate	TUV
Marine safety certificate	DNV G L ,LR and BV
Manufacturer declaration for China ROHS	Danfoss

ENGINEERING
TOMORROW

Online support

Danfoss offers a wide range of support along with our products, including digital product information, software, mobile apps, and expert guidance. See the possibilities below.

The Danfoss Product Store

The Danfoss Product Store is your one-stop shop for everything product related—no matter where you are in the world or what area of the cooling industry you work in. Get quick access to essential information like product specs, code numbers, technical documentation, certifications, accessories, and more.
Start browsing at store.danfoss.com.

Find technical documentation

Find the technical documentation you need to get your project up and running. Get direct access to our official collection of data sheets, certificates and declarations, manuals and guides, 3D models and drawings, case stories, brochures, and much more.

Start searching now at www.danfoss.com/en/service-and-support/documentation.

Danfoss Learning

Danfoss Learning is a free online learning platform. It features courses and materials specifically designed to help engineers, installers, service technicians, and wholesalers better understand the products, applications, industry topics, and trends that will help you do your job better.

Create your Danfoss Learning account for free at www.danfoss.com/en/service-and-support/learning.

Get local information and support

Local Danfoss websites are the main sources for help and information about our company and products. Find product availability, get the latest regional news, or connect with a nearby expert—all in your own language.

Find your local Danfoss website here: www.danfoss.com/en/choose-region.

Coolselector®2 - find the best components for you HVAC/R system

Coolselector®2 makes it easy for engineers, consultants, and designers to find and order the best components for refrigeration and air conditioning systems. Run calculations based on your operating conditions and then choose the best setup for your system design.

Download Coolselector®2 for free at coolselector.danfoss.com.

Danfoss can accept no responsibility for possible errors in catalogues, brochures and other printed material. Danfoss reserves the right to alter its products without notice. This also applies to products already on order provided that such alterations can be made without subsequential changes being necessary in specifications already agreed. All trademarks in this material are property of the respective companies. Danfoss and the Danfoss logotype are trademarks of Danfoss A/S. All rights reserved.